MITSUBISHI HEAVY INDUSTRIES, LTD.

Our Technologies, Your Tomorrow

R410A

# High Performance Air-Conditioning 2016

# KXZ

VRF inverter multi-system Air-Conditioners

CE

50Hz

16KX02E
EU/EEA

# High Performance Air-Conditioning 2016

KXZ

INSTALLATION FLEXIBILITY

KXZ Product Line is extended up to 60HP with combination of 3 outdoor units

MITSUBISHI HEAVY INDUSTRIES, LTD.

# Line Up

Micro model KXZ Lite KXZ

# Contents


| | |
|---|---|
| Introduction | 4~17 |
| Outdoor units | 18~55 |
| Indoor units | 56~91 |
| EEV-KIT | 92·93 |
| Control systems | 94~103 |
| Standard Large connection | 104~107 |
| Water cooled series | 108·109 |
| High Head series | 110~113 |
| Refresh series | 114·115 |
| Further information | 116~119 |

# Product Line Up

**Product lineup has been extended up to 60HP with combination of 3 outdoor units.**

**Furthermore Hi-COP series has been added to our advanced technology.**

Previous
**Up to 48HP**

→

KXZE1
**Up to 60HP**

KXZXE1
**8~36HP**

## <Outdoor units>

### from 11.2kW up to 168.0kW

| Capacity | 4HP | 5HP | 6HP | 8HP | 10HP | 12HP | 14HP | 16HP | 17HP | 18HP | 20HP |
|---|---|---|---|---|---|---|---|---|---|---|---|
| Model Code : kW | 11.2 | 14 | 15.5 | 22.4 | 28 | 33.5 | 40.0 | 45.0 | 47.5 | 50.0 | 56.0 |
| BTU / h | 38,200 | 47,800 | 52,900 | 76,400 | 95,500 | 114,300 | 136,500 | 153,500 | 162,100 | 170,600 | 191,100 |
| kcal / h | 9,600 | 12,000 | 13,300 | 19,300 | 24,100 | 28,800 | 34,400 | 38,700 | 40,900 | 43,000 | 48,200 |

| Capacity | 22HP | 24HP | 26HP | 28HP | 30HP | 32HP | 34HP | 36HP | 38HP | 40HP |
|---|---|---|---|---|---|---|---|---|---|---|
| Model Code : kW | 61.5 | 67.0 | 73.5 | 80.0 | 85.0 | 90.0 | 95.0 | 100.0 | 106.0 | 112.0 |
| BTU / h | 209,800 | 228,600 | 250,800 | 273,000 | 290,000 | 307,100 | 324,100 | 341,200 | 361,700 | 382,100 |
| kcal / h | 52,890 | 57,600 | 63,200 | 68,800 | 73,100 | 77,400 | 81,700 | 86,000 | 91,200 | 96,300 |

| Capacity | 42HP | 44HP | 46HP | 48HP | 50HP | 52HP | 54HP | 56HP | 58HP | 60HP |
|---|---|---|---|---|---|---|---|---|---|---|
| Model Code : kW | 120.0 | 125.0 | 130.0 | 135.0 | 142.5 | 145.0 | 150.0 | 156.0 | 162.0 | 168.0 |
| BTU / h | 409,400 | 426,500 | 443,600 | 460,600 | 486,200 | 494,700 | 511,800 | 532,200 | 552,700 | 573,200 |
| kcal / h | 103,200 | 107,500 | 111,800 | 116,100 | 122,600 | 124,700 | 129,000 | 134,200 | 139,300 | 144,500 |

## *Micro* model

| 4HP | 5HP | 6HP |
|---|---|---|
| FDC112KXEN6 | FDC140KXEN6 | FDC155KXEN6 |
| FDC112KXES6 | FDC140KXES6 | FDC155KXES6 |

□ 1-phase 220-240V
□ 3-phase 380-415V

| 8HP | 10HP | 12HP |
|---|---|---|
| FDC224KXE6 | FDC280KXE6 | FDC335KXE6 |

## *KXZ Lite*

| 8HP | 10HP |
|---|---|
| FDC224KXZPE1 | FDC280KXZPE1 |

## Standard model *KXZE1*

| 10HP | 12HP | 14HP | 16HP |
|---|---|---|---|
| FDC280KXZE1 | FDC335KXZE1 | FDC400KXZE1 | FDC450KXZE1 |

| 17HP | 18HP | 20HP |
|---|---|---|
| FDC475KXZE1 | FDC500KXZE1 | FDC560KXZE1 |

| 22HP | 24HP | 26HP | 28HP | 30HP | 32HP |
|---|---|---|---|---|---|
| FDC615KXZE1 | FDC670KXZE1 | FDC735KXZE1 | FDC800KXZE1 | FDC850KXZE1 | FDC900KXZE1 |
| 10+12 | 12+12 | 12+14 | 14+14 | 14+16 | 16+16 |
| FDC280KXZE1<br>FDC335KXZE1 | FDC335KXZE1<br>FDC335KXZE1 | FDC335KXZE1<br>FDC400KXZE1 | FDC400KXZE1<br>FDC400KXZE1 | FDC400KXZE1<br>FDC450KXZE1 | FDC450KXZE1<br>FDC450KXZE1 |

| 34HP | 36HP | 38HP | 40HP |
|---|---|---|---|
| FDC950KXZE1 | FDC1000KXZE1 | FDC1060KXZE1 | FDC1120KXZE1 |
| 17+17 | 18+18 | 18+20 | 20+20 |
| FDC475KXZE1<br>FDC475KXZE1 | FDC500KXZE1<br>FDC500KXZE1 | FDC500KXZE1<br>FDC560KXZE1 | FDC560KXZE1<br>FDC560KXZE1 |

| 42HP | 44HP | 46HP | 48HP | 50HP | 52HP |
|---|---|---|---|---|---|
| FDC1200KXZE1 | FDC1250KXZE1 | FDC1300KXZE1 | FDC1350KXZE1 | FDC1425KXZE1 | FDC1450KXZE1 |
| 14+14+14 | 14+14+16 | 14+16+16 | 16+16+16 | 17+17+17 | 17+17+18 |
| FDC400KXZE1<br>FDC400KXZE1<br>FDC400KXZE1 | FDC400KXZE1<br>FDC400KXZE1<br>FDC450KXZE1 | FDC400KXZE1<br>FDC450KXZE1<br>FDC450KXZE1 | FDC450KXZE1<br>FDC450KXZE1<br>FDC450KXZE1 | FDC475KXZE1<br>FDC475KXZE1<br>FDC475KXZE1 | FDC475KXZE1<br>FDC475KXZE1<br>FDC500KXZE1 |

| 54HP | 56HP | 58HP | 60HP |
|---|---|---|---|
| FDC1500KXZE1 | FDC1560KXZE1 | FDC1620KXZE1 | FDC1680KXZE1 |
| 18+18+18 | 18+18+20 | 18+20+20 | 20+20+20 |
| FDC500KXZE1<br>FDC500KXZE1<br>FDC500KXZE1 | FDC500KXZE1<br>FDC500KXZE1<br>FDC560KXZE1 | FDC500KXZE1<br>FDC560KXZE1<br>FDC560KXZE1 | FDC560KXZE1<br>FDC560KXZE1<br>FDC560KXZE1 |

## Hi-COP model *KXZXE1*

| 8HP | 10HP | 12HP |
|---|---|---|
| FDC224KXZXE1 | FDC280KXZXE1 | FDC335KXZXE1 |

| 16HP | 18HP | 20HP | 22HP | 24HP |
|---|---|---|---|---|
| FDC450KXZXE1 | FDC500KXZXE1 | FDC560KXZXE1 | FDC615KXZXE1 | FDC670KXZXE1 |
| 8+8 | 8+10 | 10+10 | 10+12 | 12+12 |
| FDC224KXZXE1<br>FDC224KXZXE1 | FDC224KXZXE1<br>FDC280KXZXE1 | FDC280KXZXE1<br>FDC280KXZXE1 | FDC280KXZXE1<br>FDC335KXZXE1 | FDC335KXZXE1<br>FDC335KXZXE1 |

| 26HP | 28HP | 30HP | 32HP | 34HP | 36HP |
|---|---|---|---|---|---|
| FDC735KXZXE1 | FDC800KXZXE1 | FDC850KXZXE1 | FDC900KXZXE1 | FDC950KXZXE1 | FDC1000KXZXE1 |
| 8+8+10 | 8+10+10 | 10+10+10 | 10+10+12 | 10+12+12 | 12+12+12 |
| FDC224KXZXE1<br>FDC224KXZXE1<br>FDC280KXZXE1 | FDC224KXZXE1<br>FDC280KXZXE1<br>FDC280KXZXE1 | FDC280KXZXE1<br>FDC280KXZXE1<br>FDC280KXZXE1 | FDC280KXZXE1<br>FDC280KXZXE1<br>FDC335KXZXE1 | FDC280KXZXE1<br>FDC335KXZXE1<br>FDC335KXZXE1 | FDC335KXZXE1<br>FDC335KXZXE1<br>FDC335KXZXE1 |

# <Indoor units>

## Wide variety of 17 types 91 models

A range of 17 types of exposed or concealed indoor units available in a wide range of capacities (total 91 indoor models). The best solution of indoor units for all applications is available from our full lineup.

### Indoor units lineup

| Type | | | Capacity | 0.5HP | 0.8HP | 1HP | 1.25HP | 1.6HP | 2HP | 2.5HP | 3.2HP | 4HP | 5HP | 6HP | 8HP | 10HP |
|---|---|---|---|---|---|---|---|---|---|---|---|---|---|---|---|---|
| | | | Model Code : kW | 15 | 22 | 28 | 36 | 45 | 56 | 71 | 90 | 112 | 140 | 160 | 224 | 280 |
| Ceiling Cassette | 4way | FDT | | | | ● | ● | ● | ● | ● | ● | ● | ● | ● | | |
| | 4way Compact (600 x 600) | FDTC | | ● | ● | ● | ● | ● | ● | | | | | | | |
| | 2way | FDTW | | | | ● | | ● | ● | ● | ● | ● | ● | | | |
| | 1way | FDTS | | | | | | ● | | ● | | | | | | |
| | 1way Compact | FDTQ | | | ● | ● | ● | | | | | | | | | |
| Duct Connected | High Static Pressure | FDU | | | | | | ● | ● | ● | ● | ● | ● | ● | ● | ● |
| | Low/Middle Static Pressure | FDUM | | | ● | ● | ● | ● | ● | ● | ● | ● | ● | ● | | |
| | Low Static Pressure (thin) | FDUT | | ● | ● | ● | ● | ● | ● | ● | | | | | | |
| | Compact & Flexible | FDUH | | | ● | ● | ● | | | | | | | | | |
| Wall Mounted | | FDK | | | ● | ● | ● | ● | ● | ● | | | | | | |
| Ceiling Suspended | | FDE | NEW | | | | ● | ● | ● | ● | | ● | ● | | | |
| Floor Standing | 2way | FDFW | | | | ● | | ● | ● | | | | | | | |
| | with casing | FDFL | | | | | | | | ● | | | | | | |
| | without casing | FDFU | | | | ● | | ● | ● | ● | | | | | | |
| OA Processing unit | | FDU-F | | | | | | | | | ● | | ● | | ● | ● |

| Type | | Air flow m³/h | 150 | 250 | 350 | 500 | 800 | 1000 |
|---|---|---|---|---|---|---|---|---|
| Fresh Air Ventilation and Heat Exchange unit | SAF | | ● | ● | ● | ● | ● | ● |
| Fresh Air DX Assembly | SAF-DX | | | ● | ● | ● | ● | ● |

# 1. High Efficiency & Compact Design

## High efficiency and compact design are realized by applying various advanced components

### 10~60HP (KXZ)

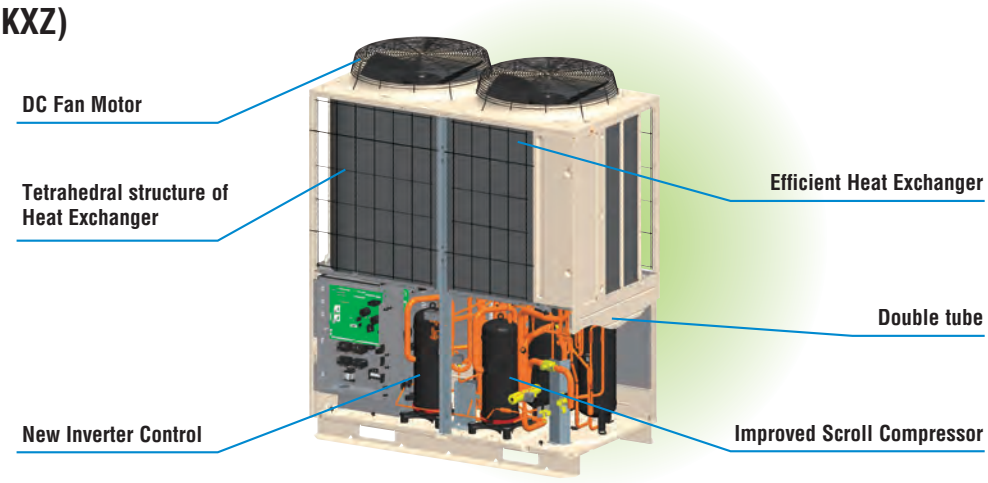


### Multiport compressor that achieves high efficiency (KXZ, KXZ Lite)

The new multiport discharge area in the compressor has optimized pressure control with better balancing. The performance improvement at medium Hz has resulted in higher annual efficiencies.

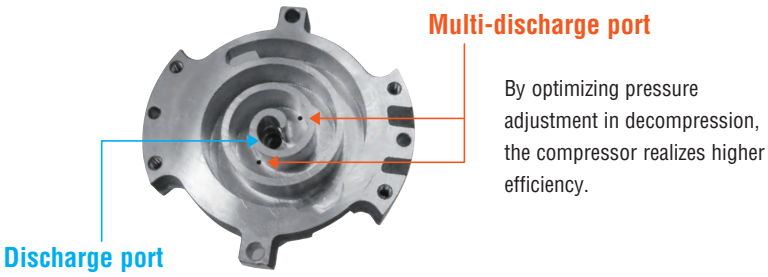


By optimizing pressure adjustment in decompression, the compressor realizes higher efficiency.

### Concentrated winding motor achieves "High Output" and "Total Efficiency Improvement"

The newly designed high performance CPU enables high precision optimization for compressor speed, which leads to concentrated winding motor use.
Our product achieves high output and better energy saving effects and in particular improves seasonal efficiency rating.

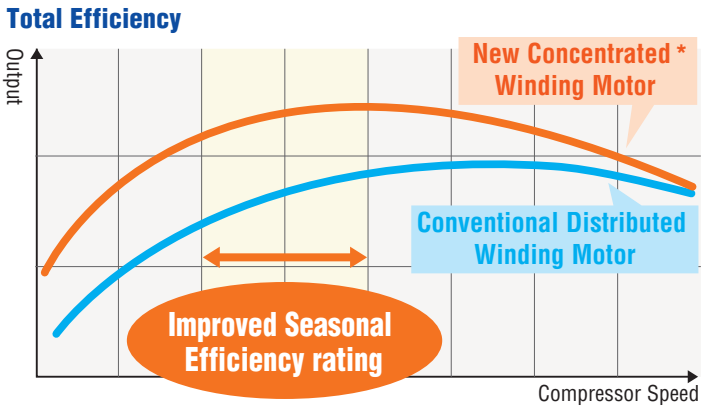


*Applied for KXZE1:10/12/17/18/20HP, KXZXE1:8HP & KXZ Lite:8/10HP

## Improved Heat-exchanger

With piping layout rearranged from header to heat exchanger, refrigerant distribution flow has improved and maximum energy efficiency has been achieved. Heat exchanger has improved refrigerant distribution and increased effectiveness.
Furthermore due to expansion of effective heat transfer area in heat exchanger, energy efficiency has increased.

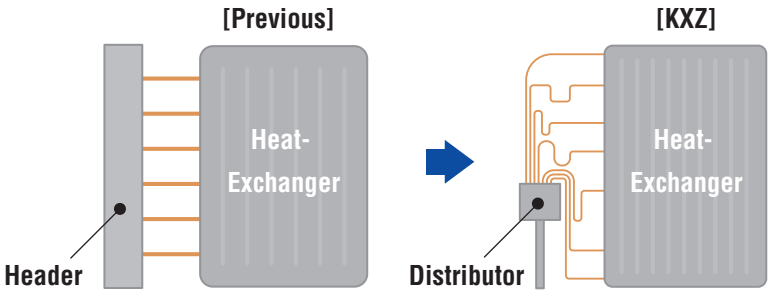


## Strengthened resistance against frost

Resistance against frost has been strengthened by achieving improved heat-exchanger.

## VTCC : Variable Temperature and Capacity Control (KXZ)

### Normal operation (in the cooling mode)

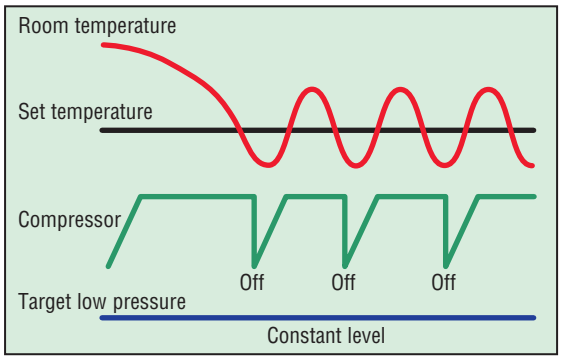


Target low pressure was set at the constant level. When room temperature got closer to set temperature, the compressor shifted operation and repeated on-off operation continuously.

### Energy saving operation (in the cooling mode)

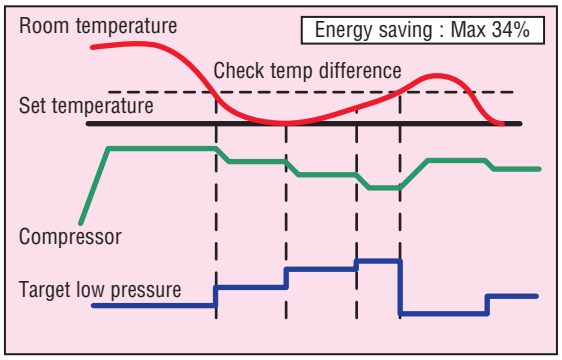


Checking the difference between room and set temperatures, the system adjusts compressor speed and target low pressure effectively. Meeting customer's requirement, manual adjustment is available.
(Need to set 7-segment or external input)

## Oil level control capability

Our proprietary technology of adjusting oil level for combination of two or three outdoor units has realized leveled operation rate, keeping performance of the units and ensuring long life of the system.

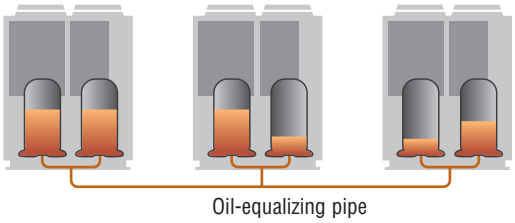


## Capacity control (KXZ)

Capacity control can be set by peak cut function with RC-EX1A for better energy saving.
Five-step capacity control is available.
(100-80-60-40-0%)

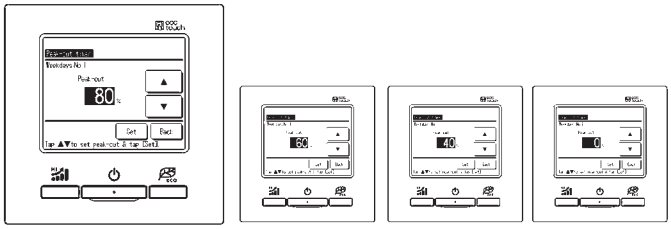

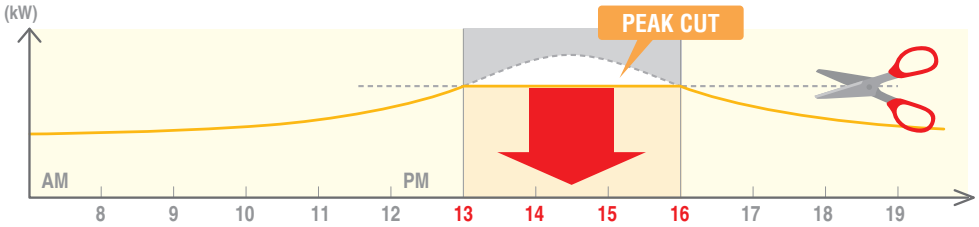

## Vector control

New applied Vector control has a high efficiency and many new advanced features.

- Smooth operation from low speed to high speed
- Smooth Sine Voltage Wave form are attained
- Energy efficiency is further improved in low speed range

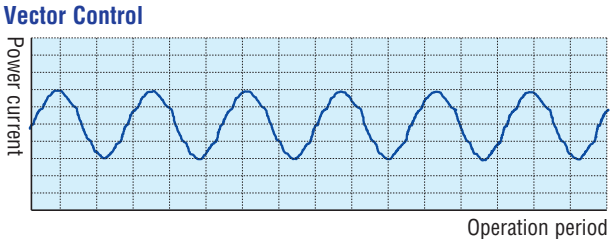


## Long-chorded 3 propeller fan with serration

Fan blade design adapted from MHI's aerospace division - with serrated edges that deliver increased air volume with less power input.

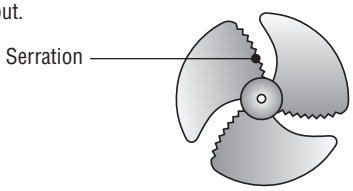


## DC Fan Motor

Employment of DC fan motor has enabled to realize an excellent efficiency of approximate 60% higher than previous models.

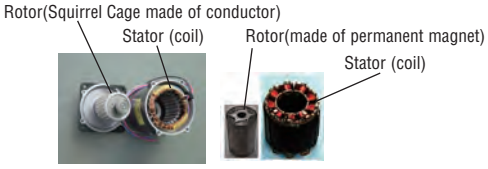


## 4~6HP (Micro)

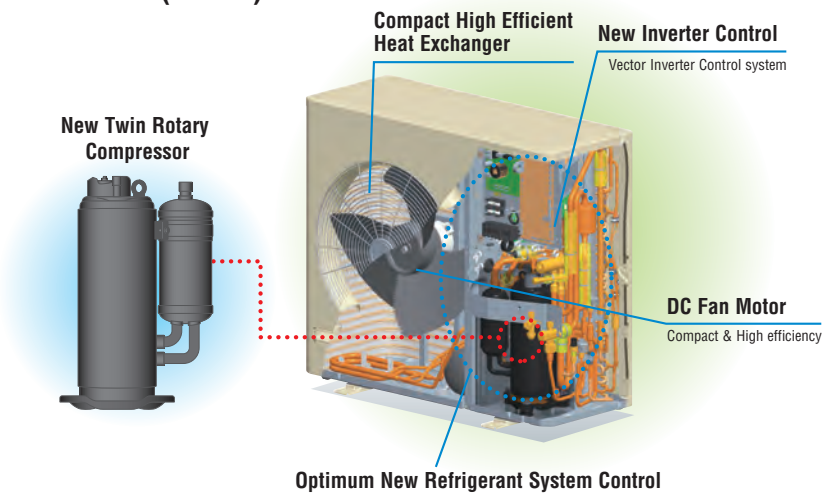


## Compact high efficiency Heat Exchanger

- Optimizing relationship of the air flow velocity & fin pattern
- Improvement of air distribution Maximizing efficiency of heat exchanger

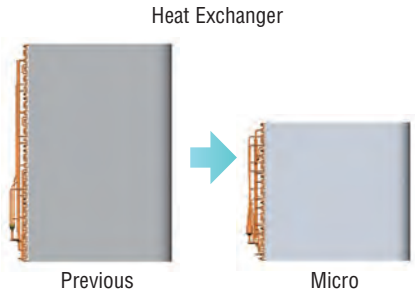


## 8~12HP (Micro)

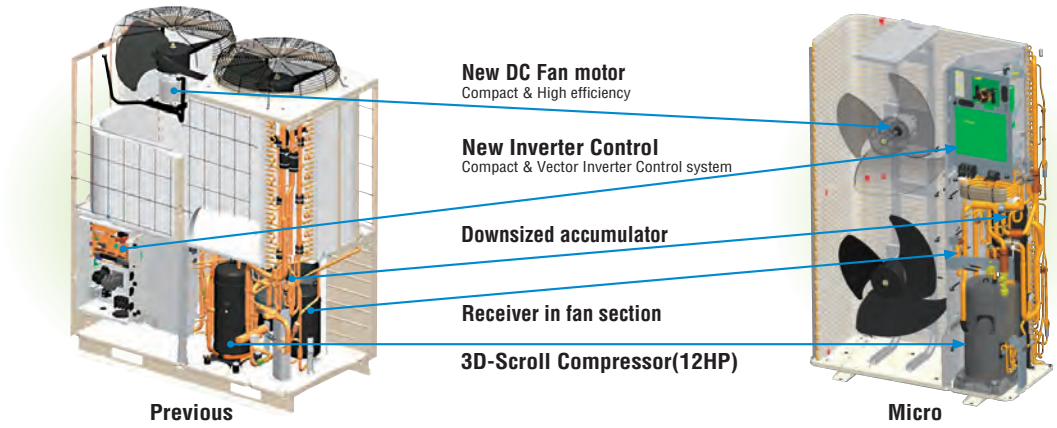

# 2. Design Flexibility

## Indoor unit capacity connection

| | HP | Capacity connection |
|---|---|---|
| Micro model | 4~12 | 150% |
| KXZ Lite | 8·10 | 120% |
| KXZE1 | 10~60 | 130% |

Capacity connection of Hi-COP KXZXE1 series &
KXZ Standard large connection series is 160～200%.
Please refer to page 34 & 104 for the detail.

## Connectable indoor units

| | | | | | | | |
|---|---|---|---|---|---|---|---|
| Micro model | HP | 4 | 5 | 6 | 8 | 10 | 12 |
| | Numbers | 6 | 8 | 8 | 22 | 24 | 24 |

| | | | |
|---|---|---|---|
| KXZ Lite | HP | 8 | 10 |
| | Numbers | 8 | 8 |

| | | | | | | | | | | | | | | | |
|---|---|---|---|---|---|---|---|---|---|---|---|---|---|---|---|
| Standard KXZE1 | HP | 10 | 12 | 14 | 16 | 17 | 18 | 20 | 22 | 24 | 26 | 28 | 30 | 32 | 34 |
| | Numbers | 24 | 29 | 34 | 39 | 41 | 43 | 48 | 53 | 58 | 63 | 69 | 73 | 78 | 80 |
| | HP | 36 | 38 | 40 | 42 | 44 | 46 | 48 | 50 | 52 | 54 | 56 | 58 | 60 | |
| | Numbers | 80 | 80 | 80 | 80 | 80 | 80 | 80 | 80 | 80 | 80 | 80 | 80 | 80 | |

## Control Systems

All series offer wide variation of control system and provide the best solution.

[Control system units with SUPERLINK-Ⅱ]

| Classification | Type | | Model | Connectable Indoor units (Maximum) | Electric power calculation |
|---|---|---|---|---|---|
| Individual controller | Wired | | RC-E5 | 16 | — |
| | | | RC-EX1A | 16 | — |
| | Wireless | | RCN-T-36W-E etc. | 16 | — |
| Center Console | Push buttons | | SC-SL1N-E | 16 | — |
| | | | SC-SL2NA-E | 64 | — |
| | Touch screen | | SC-SL4-AE | 128 | — |
| | | | SC-SL4-BE | 128 | ● |
| | PC windows interface units | | SC-WGWNB-A | 128(64x2) | — |
| | | | SC-WGWNB-B | 128(64x2) | ● |
| | BMS interface units | BACnet | SC-BGWNA256-A | 256(128x2) | — |
| | | | SC-BGWNA256-B | 256(128x2) | ● |
| | | | SC-BGWNA-A | 128(64x2) | — |
| | | | SC-BGWNA-B | 128(64x2) | ● |
| | | Lonworks | SC-LGWNA-A | 96(48x2) | — |

## Long Pipe Length 10~60HP(KXZ)

Piping length has extended max height difference between indoor units up to 18m and enables us to put indoor units on extra three floors. The furthest indoor unit: 160m or total length: 1000m contributes to system design flexibility.

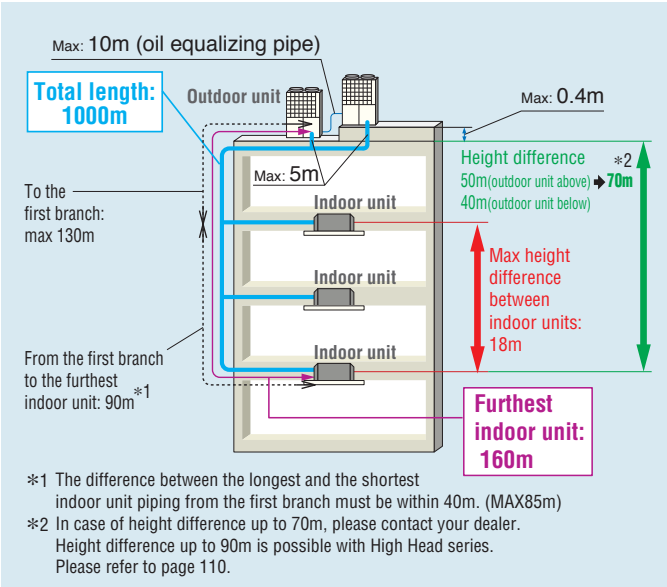


*1 The difference between the longest and the shortest indoor unit piping from the first branch must be within 40m. (MAX85m)
*2 In case of height difference up to 70m, please contact your dealer. Height difference up to 90m is possible with High Head series. Please refer to page 110.

## Easy Transportation & Installation

Due to realization of significant reduction in size and foot print which is one of the smallest in the industry, transportation in an elevator made for six persons (Width:1400mm, Depth:850, Open area:800mm) is possible, eliminating cost of a crane and reducing labor.

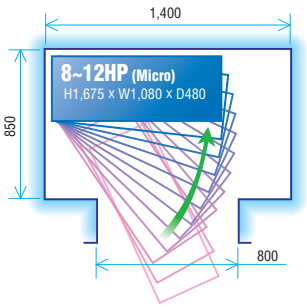


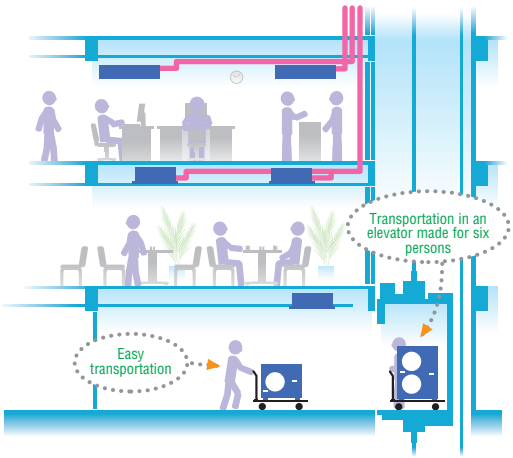


KXZ is portable and the uniform reduced footprint allows neat, continuous installation.

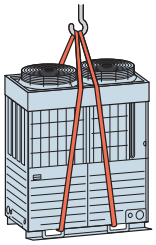

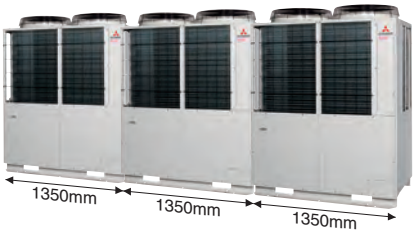


## Wide Range of Operation (KXZ, KXZ Lite)

KXZ series permits an extensible system design considering a heating range operation under a low temperature condition down to -20˚C and a cooling range operation up to 46˚C (previous model : 43˚C) Furthermore KXZ Lite extends a cooling range operation up to 50˚C.

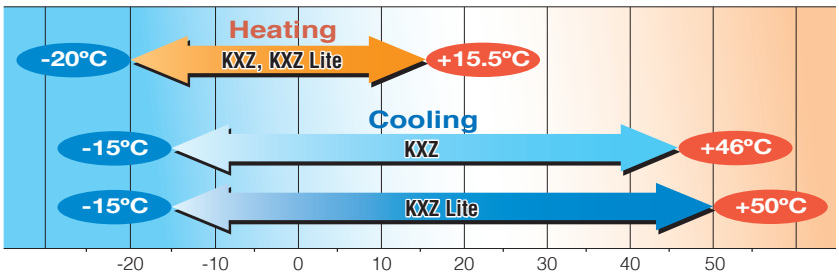

# Automatic Select functions for capacity control (KXZ Lite)

The following 3 items are available for capacity control function.
You can select one item individually or select 2or3 items at the same time.
In case of selecting 2or3 items, the unit will operate with the most effective function automatically.

## Compressor speed control

You can set compressor speed at 100%-80%-60%-40% before starting operation with PWB in the outdoor unit or with a demand controller (procured locally).

### How to set "Compressor speed"

- 1 Set the function of external input (CNS1) to "Capacity control input" using P07 of 7SEG setting.
- 2 Set the Demand rate using SW4-7, 4-8 according to the following chart.
- The input signal will be through 3 CNS1. ON/ connected, OFF/ not connected

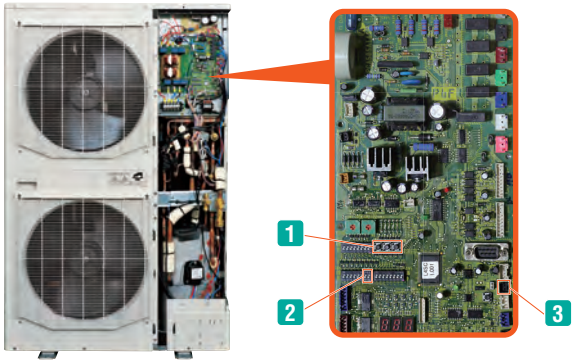


| SW4-7 | SW4-8 | Compressor speed |
|---|---|---|
| OFF | OFF | 80% |
| ON | OFF | 60% |
| OFF | ON | 40% |
| ON | ON | 0% |

## Capacity control timer

You can set※ capacity control with RC-EX1A up to 4 times per day maximum.
The timer setting can be changed using 5 minute intervals.

※Please refer to page 8.

## Silent mode

Considering noise regulations or surrounding circumstances, you can now select 4 levels of silent mode. [ 1 ] & [ 2 ]
Setting the combination of silent mode is available by using timer function of RC-EX1A.

- Silent mode [ 1 ] : Priority for capacity
  This is an effective function during low load operation conditions.
  This setting may be cancelled in overload conditions.

- Silent mode [ 2 ] : Priority for silent mode
  Regardless of operation conditions, the outdoor unit will keep the operation at the selected sound level.

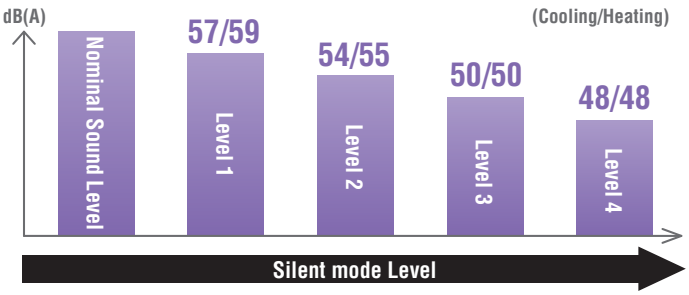

# 3. Serviceability

## Easy Service

Quick and easy access to service parts by separation of compartments.

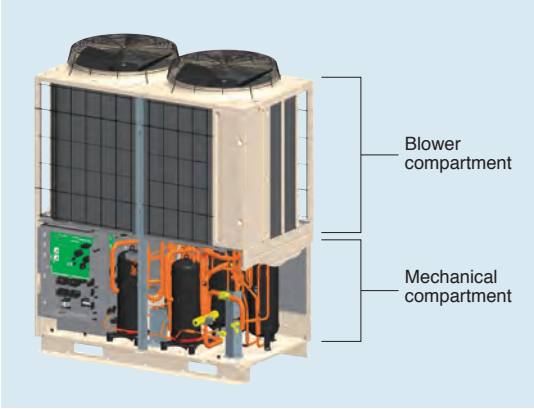


## Check Operation (10~60HP)

Closing of Service valve, crossing connection of refrigerant piping and electrical wiring, proper operation of EEV (Electrical Expansion Valve) can be checked automatically in cooling operation. This check operation can be done at 0~43ºC outdoor temperature and 10~32ºC indoor temperature by use of outdoor unit dip switch. The check should be done in one refrigerant system. It takes 15~30 minutes and avoids frequent failure by preventing careless mistakes during installation.

dip switch

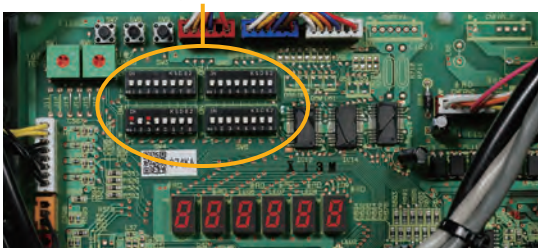

## Monitoring Function

All series includes new feature to assist with servicing and trouble shooting.
Various data can be monitored through 3-digit or 6-digit display on the outdoor unit PCB.

Detailed fault diagnosis and operation history memory via 7-segment display.

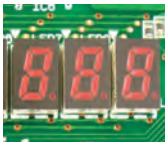

**4~6HP**
**8·10HP(KXZ Lite)**

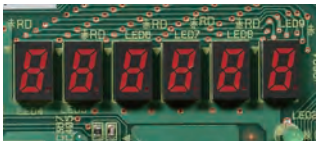

**8~60HP**

Equipped with RS232C for connection directly to your PC monitoring and service tasks made simple with our service software (“Mente PC”).
**All series**

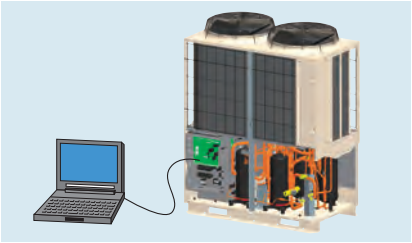

**Automatically produced test-run report**

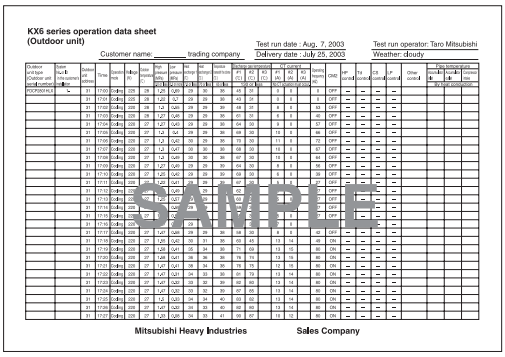
KX6 series operation data sheet
(Outdoor unit)

Customer name: _____ trading company

Test run date : Aug. 7, 2003
Delivery date : July 25, 2003

Test run operator: Taro Mitsubishi
Weather: cloudy

SAMPLE

Mitsubishi Heavy Industries Sales Company

**Operation data storage during servicing**

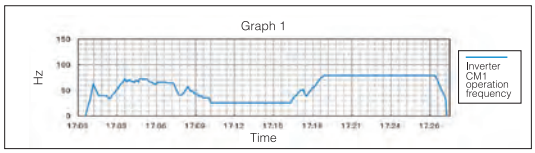


**Operation data storage when a fault occurs**

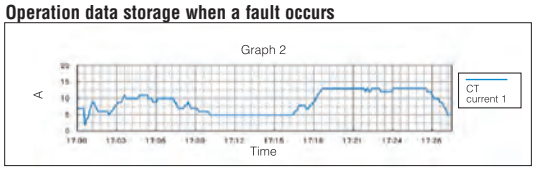


## Back-up Operation

In the event that one unit has a failure, the system will keep operating with the other good units.

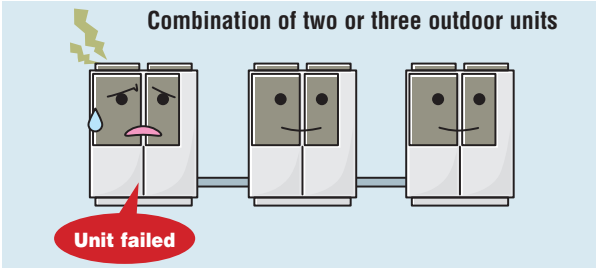


In the event that one compressor has a failure, the unit will keep operating with the another good compressor.

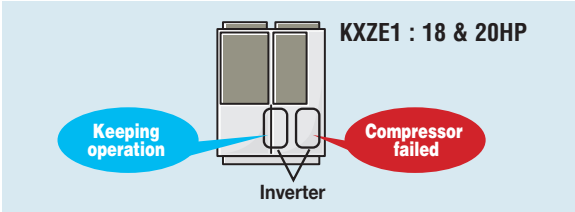


This operation is an emergency measure for a limited time and a necessary repair should be done as soon as possible.

## 3 Layer Construction

Thanks to control box structure with 3 layer/2 layer construction using hinge connection, service and maintenance has been made much easier for inverter components.

KXZ
(3 layer)

KXZ Lite
(2 layer)

## Blue Fin

Due to application of blue coated fins for the heat exchanger of new outdoor unit, corrosion resistance has been improved compared to current models.

## Improved features (KXZ Lite)

### Improved freedom of piping layout

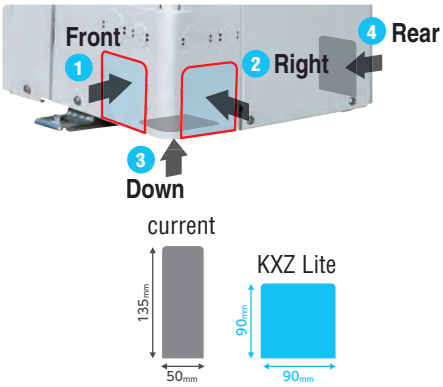


Hole size becomes 120% bigger.

### Wire insertion holes for fall prevention

### External static pressure

External static pressure is available up to 35 Pa.

### Four handles

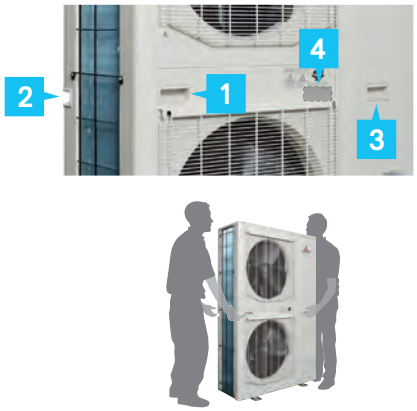


Located at the same level for easy transport and transfer.

### A transparent rain cover

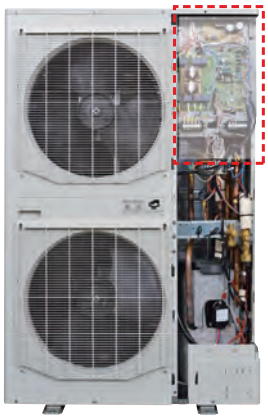

Attached as a standard for easy maintenance.

### Fixing screws to service panel

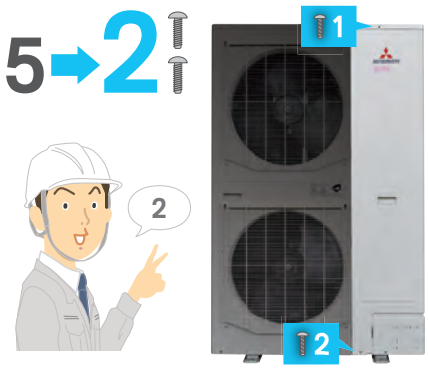


Decreasing number of screws from 5 to 2, installation & service speed is improved.

# Heat pump systems

The heat pump systems operate with 2 inter-connecting pipes, thus commonly referred to as a '2-pipe system'.

These systems provide either a heating or cooling operation to all indoor units and are suitable for a wide range of applications from an individual apartment to an entire multi storey building, especially where there are significant open plan areas to be controlled.

The range starts with a 11.2kW cooling capacity, up to 20HP with 56.0kW cooling capacity. Outdoor units can also be “twinned” or “tripled” providing up to 60HP/168.0kW on a single system.

The range has a total piping length of 1000m (KXZ) and the furthest indoor unit can be connected up to 160m (8HP+, KXZ, Micro) from the outdoor unit.

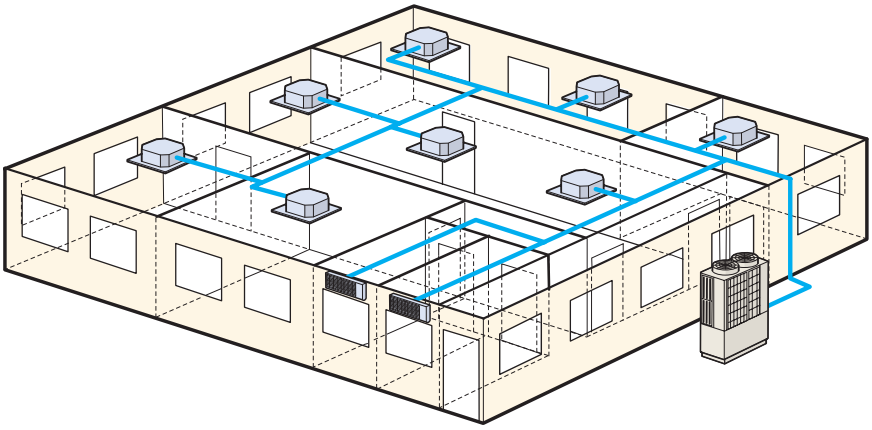

**Fixed Cooling mode/fixed heating mode (summer/winter switch):**
It is possible to fix the operational mode of the system (either cooling or heating) using a switch (SW3-7) on the outdoor unit PC board - this enables the building user to decide the operation of the system (e.g. cooling only in summer/heating only in winter), to avoid unnecessary energy wastage.
It is also possible to wire the control switch to a remote location (inside the building) to a control room, or even linked to an ambient thermostat.

## Priority operation mode rule (KXZ, KXZ Lite)

You can select the following priority operation mode. (for whole system)

1. First unit’s operation mode (by default setting)
2. Last unit’s operation mode
3. Majority operation mode (see below)
4. Master operation mode (see below)

### <Majority operation mode>

The system is operated according to the mode selected by the majority of units in operation (whichever greater capacity between the sums of cooling mode and heating mode).
The operation mode in minority is set to fan mode automatically.

### <Master operation mode>

The system is operated according to master operation mode. When master operation mode is set at cooling mode, units selected as heating mode is set to fan mode automatically.

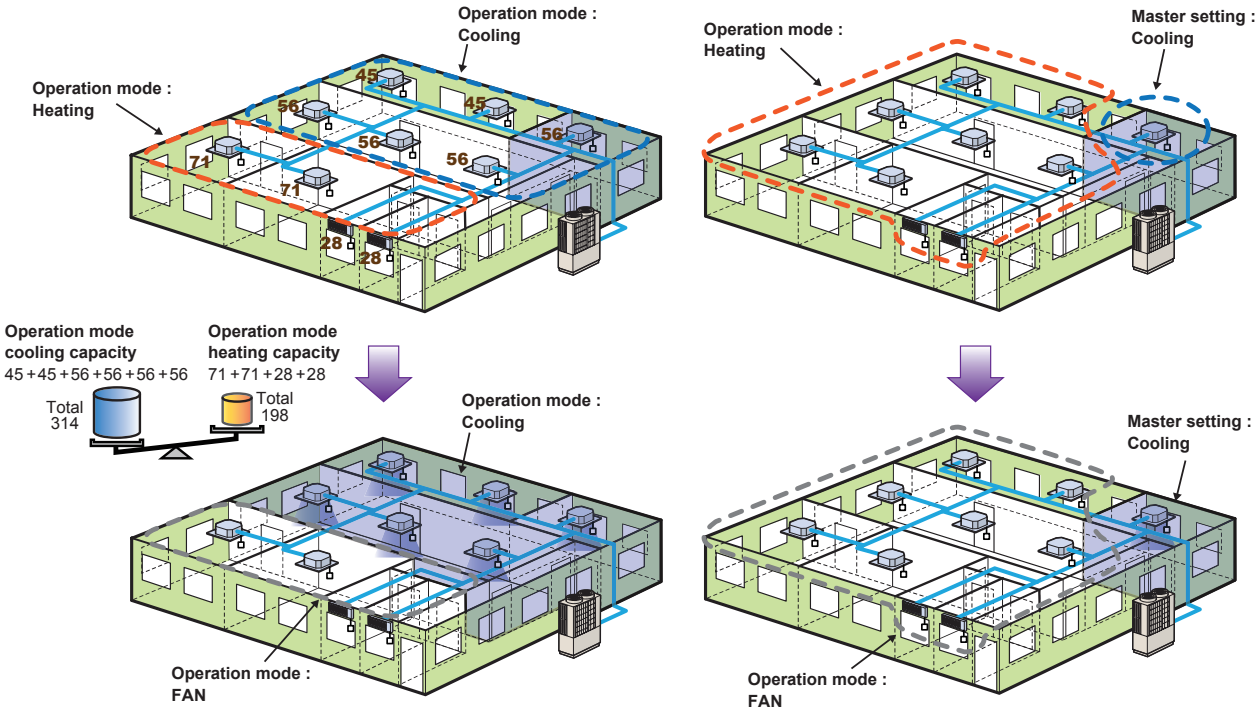

# Benefits Summary (Indoor units)

When using RC-EX1A (Remote control), functions with symbol ● are available.
However, for RC-E5 (Remote control), functions with ※ are not available.

| | | |
|---|---|---|
| Economy | Inverter technology | Inverter control technology functions at high efficiency with smooth operation from high speed to low speed. A smooth sine voltage wave is attained. |
| | Energy-saving※ | Since the capacity is controlled automatically based on the outdoor temperature, energy can be saved without losing comfort. |
| | Home leave operation※ | When the unit is not used for a long period of time, the room temperature is maintained at a moderate level, avoiding extremely hot or cool temperatures. |
| | Set temperature auto return※ | The temperature automatically returns to the previously set temperature. |
| Comfort | Automatic operation | The air conditioner automatically selects from among heating, cooling operations. |
| | Silent mode | The unit can be set to prioritise the period of time it operates at a lower noise level. |
| | Draught prevention | When starting to warm up or when the thermostat is off, the air discharge direction is set horizontally and the fan to low speed, to prevent draught. After warming up, air discharge and fan speed are set as desired. |
| | Hi power mode※ | The high power operation adjusts the room temperature quickly to a pleasant level by increasing the operation capacity. The high power operation continues for 15 minutes at maximum and returns to the normal operation automatically. |
| Air flow | Individual flap control | Motion range (upper and lower limit positions) of the flap at each air outlet can be set at a desired range individually. |
| | Vertical auto swing | Flap moves up and down continuously. The Up/Down flap swing can be fixed at the preferred operation angle. |
| | Ceiling stain prevention | The shape & angled louver redirects the air current away from the ceiling reducing ceiling stains. |
| | Automatic fan speed | The micro-computer automatically adjusts the airflow effectively to follow the changes of return air temperature. |
| Timer | Sleep timer | Set the time period from start to stop of operation. The selectable range of setting time is from 30 to 240 minutes (at 10-minute intervals). |
| | Peak-cut timer※ | Capacity control can be set by using peak cut function on RC-EX1A for better energy saving. Five-step capacity control is available. |
| | Weekly timer | On or Off timer can be set on a weekly basis. |
| Convenient | Static pressure adjustment | This is operable when connecting duct type indoor units equipped with the external static pressure adjustment function. It will adjust the airflow accordingly based on the connected duct static pressure. |
| | Remote control | You can select wired remote controls, wireless remote controls or central remote controls. |
| | Select the language※ | Set the language to be displayed on the remote control. |
| | Air filter | Removes airborne dust particles through the air filter to ensure a steady supply of clean air. |
| | Filter sign | Announces the due time for cleaning of the air filter. |
| | Outside air intake | Outside fresh air can be taken inside. |
| Others | Self-diagnosis | In the case that the air conditioner malfunctions, an internal microcomputer automatically runs a self-diagnosis. (Inspection and repair should be performed by authorized dealers.) |
| | Drain up | It allows for a flexible piping layout for condensate allowing a high degree of freedom depending on the installation location |

| FDT | FDTC | FDTW | FDTS | FDTQ | FDU | FDUM | FDUT | FDUH | FDK | FDE | FDFW | FDFL | FDFU | FDU-F |
|---|---|---|---|---|---|---|---|---|---|---|---|---|---|---|
| | | | | | | | | | | |  | | | |
| ● | ● | ● | ● | ● | ● | ● | ● | ● | ● | ● | ● | ● | ● | ● |
| ● | ● | ● | ● | ● | ● | ● | ● | ● | ● | ● | ● | ● | ● | ● |
| ● | ● | ● | ● | ● | ● | ● | ● | ● | ● | ● | ● | ● | ● | ● |
| ● | ● | ● | ● | ● | ● | ● | ● | ● | ● | ● | ● | ● | ● | ● |
| ● | ● | ● | ● | ● | ● | ● | ● | ● | ● | ● | ● | ● | ● | ● |
| ● | ● | ● | ● | ● | ● | ● | ● | ● | ● | ● | ● | ● | ● | ● |
| ● | ● | ● | ● | ● | | | | | ● | ● | | | | |
| ● | ● | ● | ● | ● | ● | ● | ● | ● | ● | ● | ● | ● | ● | ● |
| ● | ● | ● | ● | | | | | | ● | ● | ● | | | |
| ● | ● | ● | ● | ● | | | | | ● | ● | ● | | | |
| ● | ● | ● | ● | ● | | | | | | | | | | |
| ● | ● | ● | ● | ● | ● | ● | ● | ● | ● | ● | ● | ● | ● | ● |
| ● | ● | ● | ● | ● | ● | ● | ● | ● | ● | ● | ● | ● | ● | ● |
| ● | ● | ● | ● | ● | ● | ● | ● | ● | ● | ● | ● | ● | ● | ● |
| ● | ● | ● | ● | ● | ● | ● | ● | ● | ● | ● | ● | ● | ● | ● |
| | | | | | ● | ● | ● (71only) | | | | | | | ● |
| ● Option | ● Option | ● Option | ● Option | ● Option | ● Option | ● Option | ● Option | ● Option | ● Option | ● Option | ● Option | ● Option | ● Option | ● Option |
| ● | ● | ● | ● | ● | ● | ● | ● | ● | ● | ● | ● | ● | ● | ● |
| ● | ● | ● | ● | ● | procure locally | ● Option | ● Option | ● Option | ● | ● | ● | ● | ● | procure locally |
| ● | ● | ● | ● | ● | ● | ● | ● | ● | ● | ● | ● | ● | ● | ● |
| ● | ● Option | ● | ● | ● | ● | ● | ● | ● | | | | | | ● |
| ● | ● | ● | ● | ● | ● | ● | ● | ● | ● | ● | ● | ● | ● | ● |
| ● | ● | ● | ● | ● | ● ⋆1 | ● | ● | ● Option | | | | | | ● ⋆2 |

⋆1 : Except 224・280　⋆2 : Except 1800・2400

# *Micro* Outdoor units
# Heat pump systems 4, 5, 6HP (11.2kW~15.5kW)

| Model No. | Nominal Cooling Capacity |
|---|---|
| FDC112KXEN6 | 11.2kW (1Phase) |
| FDC140KXEN6 | 14.0kW (1Phase) |
| FDC155KXEN6 | 15.5kW (1Phase) |
| FDC112KXES6 | 11.2kW (3Phase) |
| FDC140KXES6 | 14.0kW (3Phase) |
| FDC155KXES6 | 15.5kW (3Phase) |

Blue Fin

- These heat pump 2-pipe systems offer high performance VRF for applications that require either cooling only or heating only, ideal for open plan areas.
- Connect up to 8 indoor units/up to 150% capacity.
- High efficiency with COP (in cooling) up to 4.0.
- These units employ DC inverter compressors ONLY.
- Industry leading total piping length up to 100m and a maximum pipe run of 70m.

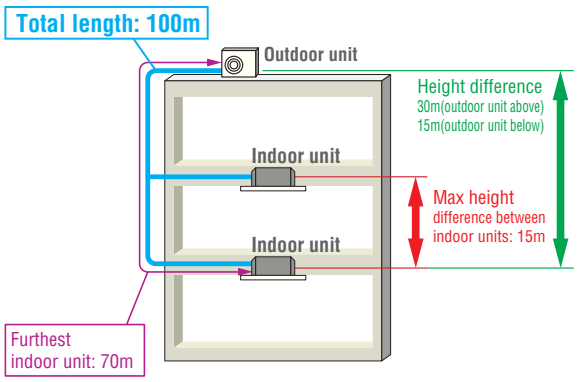


* The total length of ø9.52mm(3/8") liquid piping must be 50m or less

Range of operation

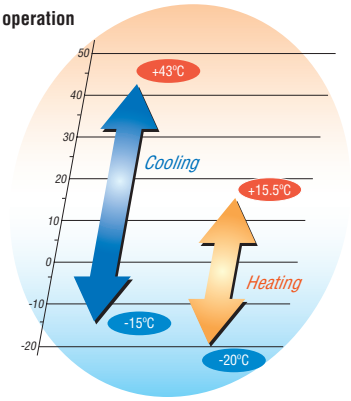


Note:FDUT15KXE6F-E and FDTC15KXE6F can not be connected to the above systems.

## Specifications

| Item | | | Model | FDC112KXEN6 | FDC140KXEN6 | FDC155KXEN6 | FDC112KXES6 | FDC140KXES6 | FDC155KXES6 |
|---|---|---|---|---|---|---|---|---|---|
| Nominal horse power | | | | 4HP | 5HP | 6HP | 4HP | 5HP | 6HP |
| Power source | | | | 1 Phase 220-240V, 50Hz | | | 3 Phase 380-415V, 50Hz | | |
| Starting current | | | A | 5 | | | | | |
| Max current | | | A | 23 | | 23.3 | 13.5 | | |
| Nominal capacity | Cooling | | kW | 11.2 | 14.0 | 15.5 | 11.2 | 14.0 | 15.5 |
| | Heating | | | 12.5 | 16.0 | 16.3 | 12.5 | 16.0 | 16.3 |
| Electrical characteristics | Power consumption | Cooling | kW | 2.80 | 4.17 | 4.71 | 2.80 | 4.17 | 4.71 |
| | | Heating | | 2.89 | 4.31 | 4.38 | 2.89 | 4.31 | 4.38 |
| Exterior dimensions | HxWxD | | mm | 845x970x370 | | | | | |
| Net weight | | | kg | 85 | | | 87 | | |
| Refrigerant charge | R410A | | kg | 5.0 | | | | | |
| Sound pressure level | Cooling/Heating | | dB(A) | 52/54 | 53/57 | 53/57 | 52/54 | 53/57 | 53/57 |
| Refrigerant piping size | Liquid line | | mm(in) | ø9.52(3/8") | | | | | |
| | Gas line | | | ø15.88(5/8") | | | | | |
| Capacity connection | | | % | 80~150 | | | | | |
| Number of connectable indoor units | | | | 6 | 8 | 8 | 6 | 8 | 8 |

1. The data are measured under the following conditions(ISO-T1). Cooling: Indoor temp. of 27°CDB, 19°CWB, and outdoor temp. of 35°CDB. Heating: Indoor temp. of 20°CDB, and outdoor temp. of 7°CDB, 6°CWB. Piping length is 7.5m.
2. Sound pressure level indicates the value in an anechoic chamber. During operation these values are somewhat higher due to ambient conditions.

# Refrigerant piping

| Outdoor unit (HP) | | 4 | 5 | 6 |
|---|---|---|---|---|
| Gas pipe | Furthest indoor unit =<70m | ø15.88 | | |
| Liquid pipe | | ø9.52 | | |

Branch pipes

**DIS-22-1G**
**DIS-180-1G**

Header pipe

**HEAD4-22-1G**
**HEAD6-180-1G**

# Dimensions

All measurements in mm.

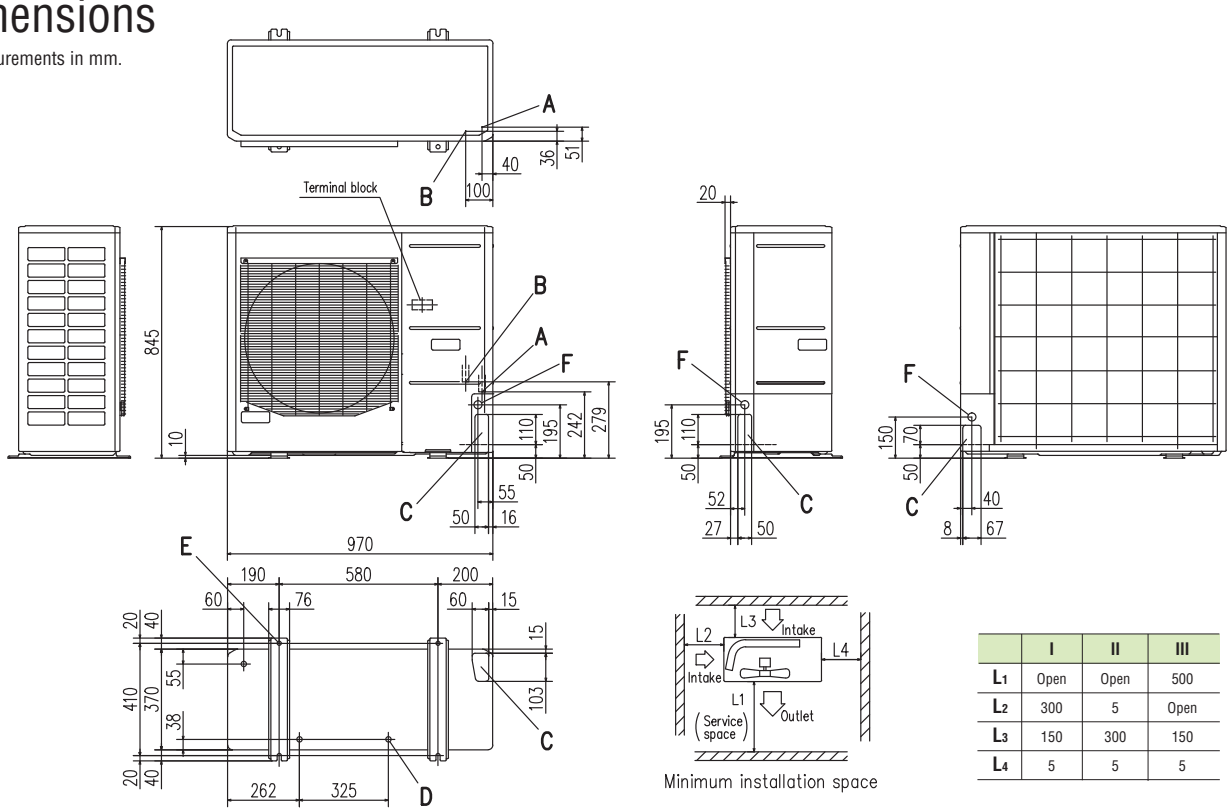


Minimum installation space

| | I | II | III |
|---|---|---|---|
| $L_1$ | Open | Open | 500 |
| $L_2$ | 300 | 5 | Open |
| $L_3$ | 150 | 300 | 150 |
| $L_4$ | 5 | 5 | 5 |

| Mark | Content | |
|---|---|---|
| A | Service valve connection (gas side) | ø15.88 (5/8") (Flare) |
| B | Service valve connection (liquid side) | ø9.52 (3/8") (Flare) |
| C | Pipe/cable draw-out hole | |
| D | Drain discharge hole | ø20 x 3 places |
| E | Anchor bolt hole | M10 x 4 places |
| F | Cable draw-out hole | ø30 x 3 places |

Notes:
(1) It must not be surrounded by walls on the four sides.
(2) The unit must be fixed with anchor bolts. An anchor bolt must not protrude more than 15mm.
(3) Where the unit is subject to strong winds, lay it in such a direction that the blower outlet faces perpendicularly to the dominant wind direction.
(4) Leave 1m or more space above the unit.
(5) A wall in front of the blower outlet must not exceed the units height.
(6) The model name label is attached on the lower right corner of the front panel.

## 〈For EU/EEA area only〉

Based on European regulations listed below, please refer the following specification table.

No.626/2011 of 4 May 2011: energy labeling of air-conditioners(below cooling capacity 12kW)

No.206/2012 of 6 March 2012: requirement for air-conditioners and comfort fans

### Specification table

| Outdoor unit | | FDC112KXEN6/112KXES6 | |
|---|---|---|---|
| Indoor unit | | FDT series only | FDT series & others |
| Energy class(cooling/heating) | | A+/A+ | C/A |
| SEER | | 6 | 4.3 |
| SCOP(Average climate) | | 4.2 | 3.8 |
| Pdesignc | kW | 11.2 | |
| Pdesignh(@-10°C) | kW | 9.5 | |
| Annual energy consumption(cooling/heating) | kW | 664/3212 | 910/3515 |
| Sound power level | dB(A) | 68 | |
| Refrigerant (GWP) | | R410A (1975) | |
| Designated heating season | | Average | |
| Capacity combination | % | 96.4～104.5 | |
| Number of connectable indoor units | | 5 | |

R410A refrigerant contained in the products is a fluorinated greenhouse gas listed in Regulation (EU) No 517/2014.

# Micro Outdoor units
# Heat pump systems 8, 10, 12HP (22.4kW~33.5kW)

| Model No. | Nominal Cooling Capacity |
|---|---|
| FDC224KXE6 | 22.4kW |
| FDC280KXE6 | 28.0kW |
| FDC335KXE6 | 33.5kW |

- These heat pump 2-pipe systems offer high performance VRF for applications that require either cooling only or heating only, ideal for open plan areas.
- Connect up to 24 indoor units/up to 150% capacity.
- High efficiency with COP (in cooling) up to 4.0.
- These units employ DC inverter compressors ONLY.
- Industry leading total piping length up to 510m and a maximum pipe run of 160m.

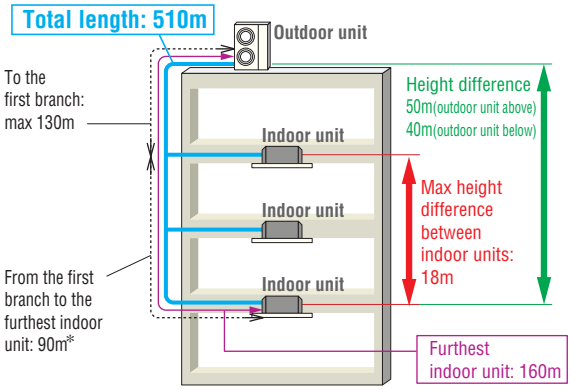


* The difference between the longest and the shortest indoor unit piping from the first branch must be within 40m.

**Range of operation**

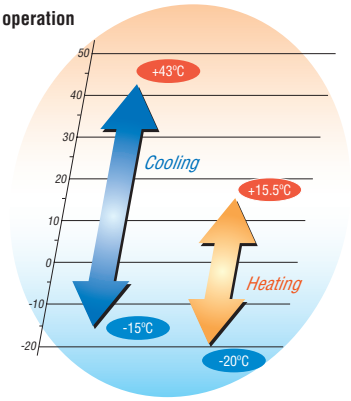


## Specifications

| Item | | | Model | FDC224KXE6 | FDC280KXE6 | FDC335KXE6 |
|---|---|---|---|---|---|---|
| Nominal horse power | | | | 8HP | 10HP | 12HP |
| Power source | | | | 3 Phase 380-415V, 50Hz | | |
| Starting current | | | A | 5 | | |
| Max current | | | A | 20 | | 23 |
| Nominal capacity | Cooling | | kW | 22.4 | 28.0 | 33.5 |
| | Heating | | | 25.0 | 31.5 | 37.5 |
| Electrical characteristics | Power consumption | Cooling | kW | 5.60 | 8.09 | 9.82 |
| | | Heating | | 6.03 | 8.21 | 10.12 |
| Exterior dimensions | HxWxD | | mm | 1675x1080x480 | | |
| Net weight | | | kg | 221 | | 224 |
| Refrigerant charge | R410A | | kg | 11.5 | | |
| Sound pressure level | Cooling/Heating | | dB(A) | 58/58 | 59/60 | 61/61 |
| Refrigerant piping size | Liquid line | | mm(in) | ø9.52(3/8") | | ø12.7(1/2") |
| | Gas line | | | ø19.05(3/4") | ø22.22(7/8") | ø25.4(1") [ø22.22(7/8")] |
| Capacity connection | | | % | 50~150 | | |
| Number of connectable indoor units | | | | 22 | 24 | 24 |

1. The data are measured under the following conditions(ISO-T1). Cooling: Indoor temp. of 27°CDB, 19°CWB, and outdoor temp. of 35°CDB. Heating: Indoor temp. of 20°CDB, and outdoor temp. of 7°CDB, 6°CWB. Piping length is 7.5m.
2. Sound pressure level indicates the value in an anechoic chamber. During operation these values are somewhat higher due to ambient conditions.
3. [ ] : Pipe sizes applicable to European installations are shown in parentheses.

# Refrigerant piping

| Outdoor unit (HP) | | 8 | 10 | 12 |
|---|---|---|---|---|
| Gas pipe | Furthest indoor unit =<90m | ø19.05 | ø22.22 | ø28.58 |
| Liquid pipe | | ø9.52 | | ø12.7 |
| Gas pipe | Furthest indoor unit =<90m | ø22.22 | ø28.58 | |
| Liquid pipe | | ø12.7 | | |

Branch pipes

**DIS-22-1G**
**DIS-180-1G**

**DIS-371-1G**

Header pipe

**HEAD4-22-1G**
**HEAD6-180-1G**
**HEAD8-371-2**

# Dimensions

All measurements in mm.

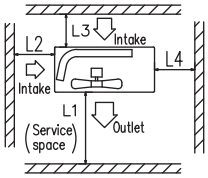


Minimum installation space

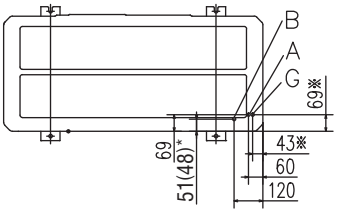


| | I | II | III |
|---|---|---|---|
| $L_1$ | Open | Open | 1500(500)*1 |
| $L_2$ | 300 | 5 | Open |
| $L_3$ | 300 | 300 | 300 |
| $L_4$ | 250(5)*2 | 250(5)*2 | 250(5)*2 |

Notes:
*1 Figure in ( ) shows the value applicable when the flex flow adaptor is installed.
*2 Under the setting condition as specified in ( ), it is necessary to secure 250 mm for the dimension L4 when replacing the compressor. Establish this for example by moving the unit during the work.

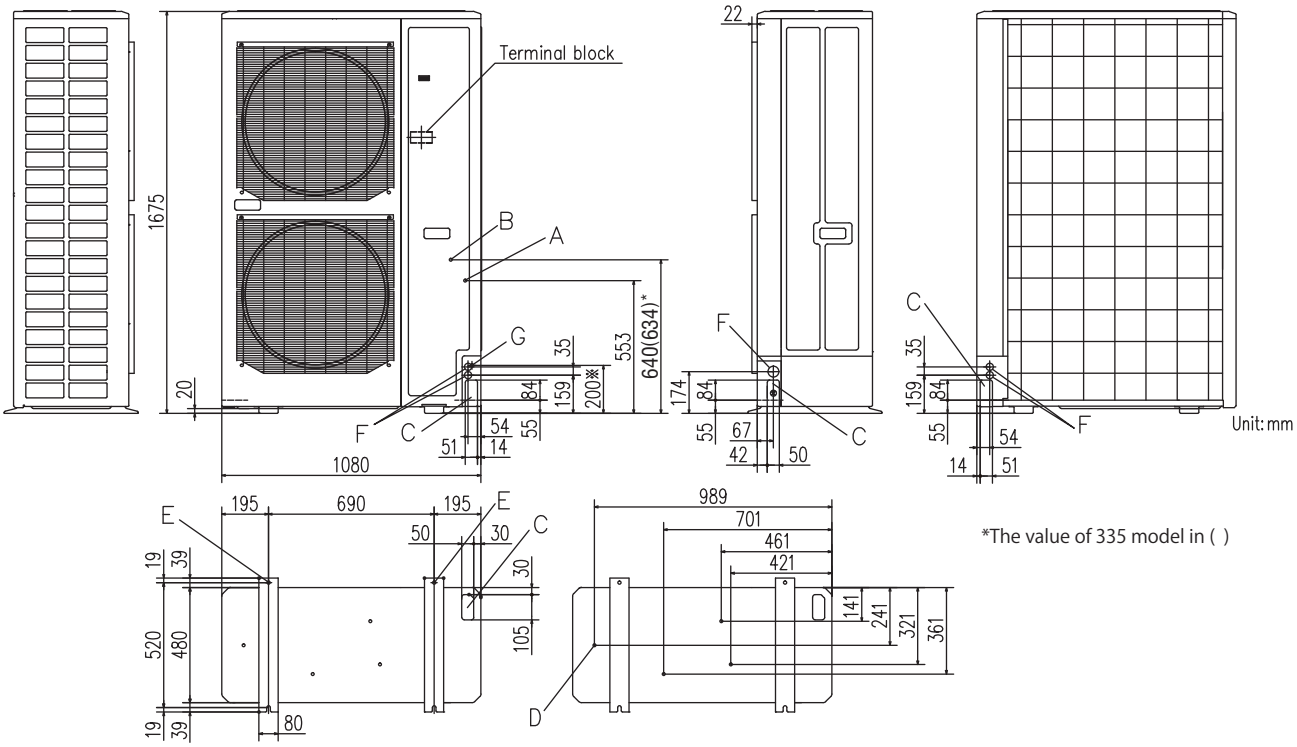


*The value of 335 model in ( )

| Mark | Item | 224 | 280 | 335 |
|---|---|---|---|---|
| A | Service valve connection of the attached connecting pipe (gas side) | ø19.05 (3/4") (Flare) | ø19.05 (3/4") (Flare) | ø19.05 (3/4") (Flare) |
| B | Service valve connection (liquid side) | ø9.52 (3/8") (Flare) | ø9.52 (3/8") (Flare) | ø12.7 (1/2") (Flare) |
| C | Pipe/cable draw-out hole | 4places | 4places | 4places |
| D | Drain discharge hole | ø20 x 4places | ø20 x 4places | ø20 x 4places |
| E | Anchor bolt hole | M10 x 4places | M10 x 4places | M10 x 4places |
| F | Cable draw-out hole | ø30 x 2places (front)<br>ø45 (side)<br>ø30 x 2places (back) | ø30 x 2places (front)<br>ø45 (side)<br>ø30 x 2places (back) | ø30 x 2places (front)<br>ø45 (side)<br>ø30 x 2places (back) |
| G | Connecting position of the local pipe. (gas side) | ø19.05 (3/4")(Brazing) | ø22.22 (7/8")(Brazing) | ø25.4 (1")(Brazing) |

Notes:
(1) It must not be surrounded by walls on the four sides.
(2) The unit must be fixed with anchor bolts. An anchor bolt must not protrude more than 15mm.
(3) Where the unit is subject to strong winds, the blower outlet shoud face perpendicularly to the dominant wind direction.
(4) Leave a 1m or more space above the unit.
(5) A wall in front of the blower outlet must not exceed the units height.
(6) The model name label is attached on the lower right corner of the front.
(7) Connect the Service valve with local pipe by using the pipe of the attachment.(Gas side only)
(8) Mark ※ shows the connecting position of the local pipe.(Gas side only)

# KXZ Lite Outdoor units
# Heat pump systems 8, 10HP (22.4kW · 28.0kW)

| Model No. | Nominal Cooling Capacity |
|---|---|
| FDC224KXZPE1 | 22.4kW |
| FDC280KXZPE1 | 28.0kW |

- These heat pump 2-pipe systems offer high performance VRF for applications that require either cooling only or heating only, ideal for open plan areas.
- Connect up to 8 indoor units/up to 120% capacity.
- High efficiency with COP (in cooling) up to 4.0.
- These units employ DC inverter multiport compressors with concentrated winding motor.

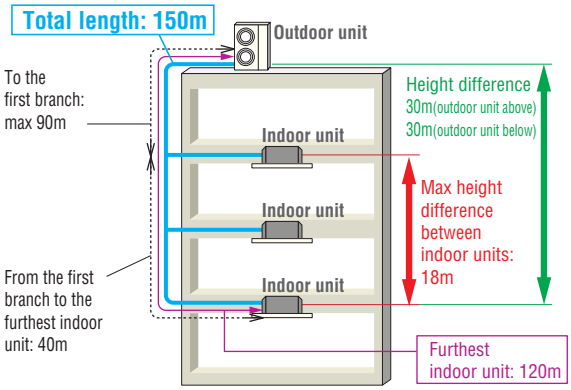


Range of operation

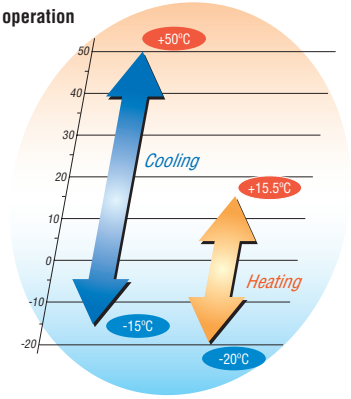


## Specifications

| Item | | | Model | FDC224KXZPE1 | FDC280KXZPE1 |
|---|---|---|---|---|---|
| Nominal horse power | | | | 8HP | 10HP |
| Power source | | | | 3 Phase 380-415V, 50Hz | |
| Starting current | | | A | 5 | |
| Max current | | | A | 21 | 22 |
| Nominal capacity | Cooling | | kW | 22.4 | 28.0 |
| | Heating | | | 22.4 | 28.0 |
| Electrical characteristics | Power consumption | Cooling | kW | 5.6 | 7.87 |
| | | Heating | | 4.8 | 6.47 |
| Exterior dimensions | HxWxD | | mm | 1505x970x370 | |
| Net weight | | | kg | 165 | |
| Refrigerant charge | R410A | | kg | 8.9 | |
| Sound pressure level | Cooling/Heating | | dB(A) | 59/60 | 60/63 |
| Refrigerant piping size | Liquid line | | mm(in) | ø9.52(3/8") | |
| | Gas line | | | ø19.05(3/4") | ø22.22(7/8") |
| Capacity connection | | | % | 50~120 | |
| Number of connectable indoor units | | | | 8 | 8 |

1. The data are measured under the following conditions(ISO-T1). Cooling: Indoor temp. of 27°CDB, 19°CWB, and outdoor temp. of 35°CDB. Heating: Indoor temp. of 20°CDB, and outdoor temp. of 7°CDB, 6°CWB. Piping length is 7.5m.
2. Sound pressure level indicates the value in an anechoic chamber. During operation these values are somewhat higher due to ambient conditions.

# Refrigerant piping

| Outdoor unit (HP) | | 8 | 10 |
|---|---|---|---|
| Gas pipe | Furthest indoor unit =<90m | ø19.05 | ø22.22 |
| Liquid pipe | | ø9.52 | |
| Gas pipe | Furthest indoor unit =<90m | ø22.22 | ø25.4/ø28.58 |
| Liquid pipe | | ø12.7 | |

Branch pipes

**DIS-22-1G**
**DIS-180-1G**

Header pipe

**HEAD4-22-1G**
**HEAD6-180-1G**

# Dimensions

All measurements in mm.

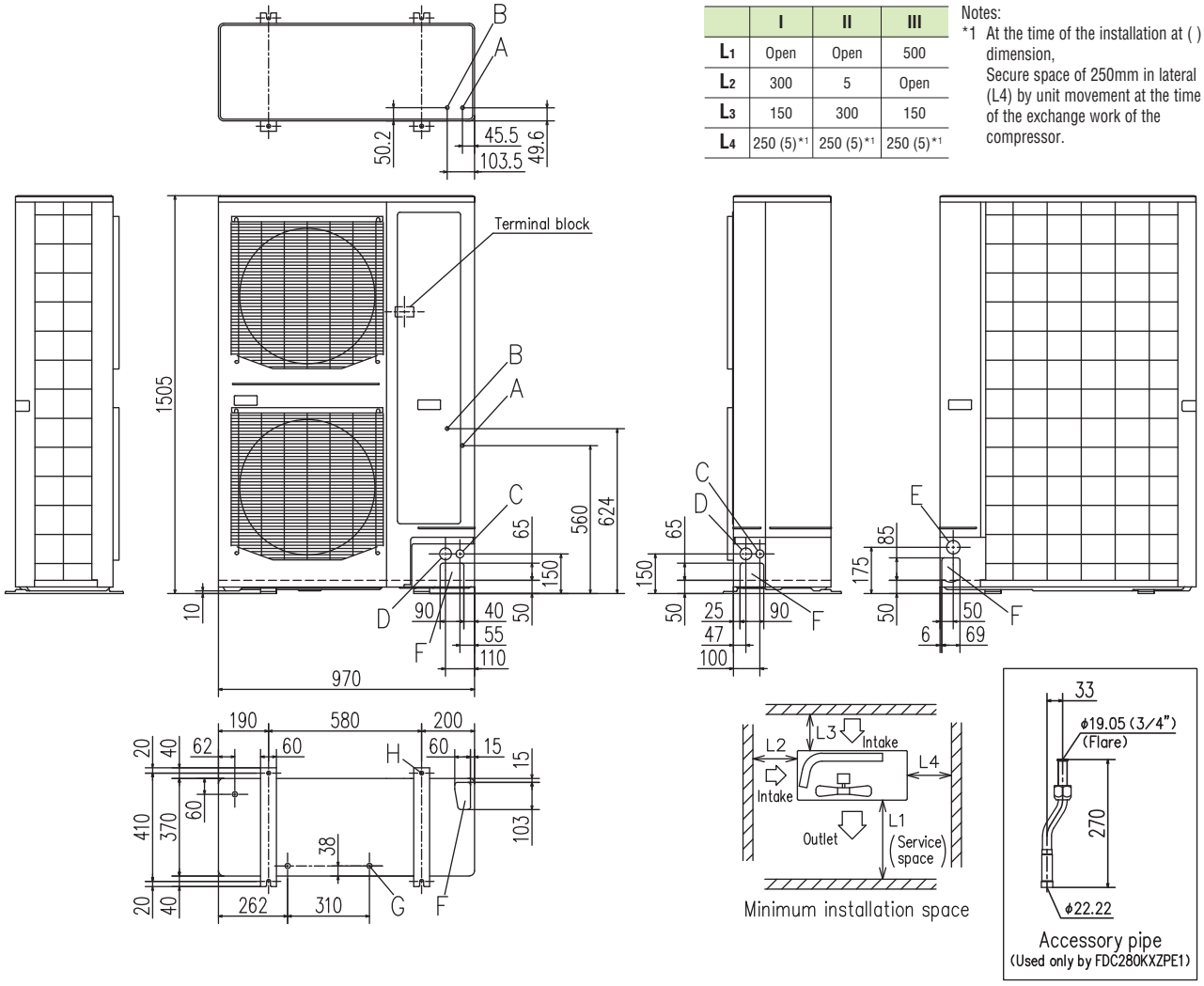


| | I | II | III |
|---|---|---|---|
| $L_1$ | Open | Open | 500 |
| $L_2$ | 300 | 5 | Open |
| $L_3$ | 150 | 300 | 150 |
| $L_4$ | 250 (5)*1 | 250 (5)*1 | 250 (5)*1 |

Notes:
*1 At the time of the installation at ( ) dimension,
Secure space of 250mm in lateral (L4) by unit movement at the time of the exchange work of the compressor.

| Mark | Item | |
|---|---|---|
| A | Service valve connection of the attached connecting pipe (gas side) | ø19.05 (3/4") (Flare) |
| B | Service valve connection (liquid side) | ø9.52 (3/8") (Flare) |
| C | Cable draw-out hole (front · side) | ø30 x 2places |
| D | Cable draw-out hole (front · side) | ø45 x 2places |
| E | Cable draw-out hole (back) | ø50 |
| F | Pipe/cable draw-out hole | 4places |
| G | Drain discharge hole | ø20 x 3places |
| H | Anchor bolt hole | M10 x 4places |

Notes:
(1) It must not be surrounded by walls on the four sides.
(2) The unit must be fixed with anchor bolts.
An anchor bolt must not protrude more than 15mm.
(3) Where the unit is subject to strong winds, lay it in such a direction that the blower outlet faces perpendicularly to the dominant wind direction.
(4) Leave 1m or more space above the unit.
(5) A wall in front of the blower outlet must not exceed the units height.
(6) The model name label is attached on the lower right corner of the front panel.
(7) Connect the Service valve with local pipe by using the pipe of the attachment. (Gas side only) (Accessory pipe is used only by FDC280KXZPE1)
(8) Regarding attaching the pipe of accessories, refer to an attached installation manual.

# KXZ Outdoor units
# Heat pump systems 10, 12HP (28.0kW, 33.5kW)

| Model No. | Nominal Cooling Capacity |
|---|---|
| FDC280KXZE1 | 28.0kW |
| FDC335KXZE1 | 33.5kW |

Uniform footprint of models (10,12HP) allows continuous side-by-side installation

- The KXZ heat pump 2-pipe systems offer high performance VRF for applications that require either cooling only or heating only, ideal for open plan areas.
- Connect up to 29 indoor units/up to 130% capacity.
- High efficiency with COP (in cooling) up to 3.9.
- KXZ employs DC inverter compressors ONLY.
- Industry leading total piping length up to 1000m and a maximum pipe run of 160m.

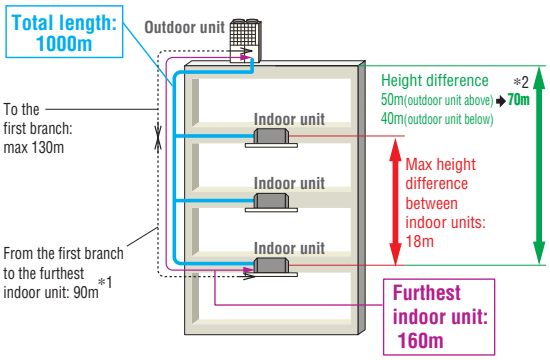


*1 The difference between the longest and the shortest indoor unit piping from the first branch must be within 40m. (MAX85m)
*2 In case of height difference up to 70m, please contact your dealer. Height difference up to 90m is possible with High Head series. Please refer to page 110.

**Range of operation**

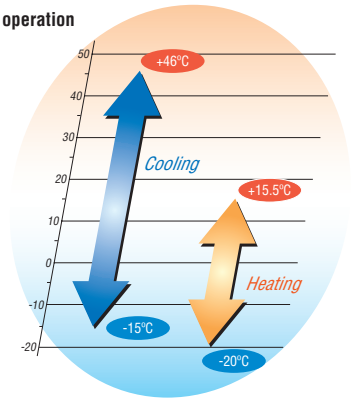


## Specifications

| Item | | | Model | FDC280KXZE1 | FDC335KXZE1 |
|---|---|---|---|---|---|
| Nominal horse power | | | | 10HP | 12HP |
| Power source | | | | 3 Phase 380-415V, 50Hz | |
| Starting current | | | A | 5 | |
| Max current | | | A | 21.2 | |
| Nominal capacity | Cooling | | kW | 28.0 | 33.5 |
| | Heating | | | 31.5 | 37.5 |
| Electrical characteristics | Power consumption | Cooling | kW | 7.24 | 8.96 |
| | | Heating | | 7.28 | 9.04 |
| Exterior dimensions | HxWxD | | mm | 1690x1350x720 | |
| Net weight | | | kg | 272 | |
| Refrigerant charge | R410A | | kg | 11.0 | |
| Sound pressure level | Cooling/Heating | | dB(A) | 55/57 | 61/58 |
| Refrigerant piping size | Liquid line | | mm(in) | ø9.52(3/8") | ø12.7(1/2") |
| | Gas line | | | ø22.22(7/8") | ø25.4(1") [ø22.22(7/8")] |
| Capacity connection | | | % | 50~130 | |
| Number of connectable indoor units | | | | 24 | 29 |

1. The data are measured under the following conditions(ISO-T1). Cooling: Indoor temp. of 27°CDB, 19°CWB, and outdoor temp. of 35°CDB. Heating: Indoor temp. of 20°CDB, and outdoor temp. of 7°CDB, 6°CWB. Piping length is 7.5m.
2. Sound pressure level indicates the value in an anechoic chamber. During operation these values are somewhat higher due to ambient conditions.
3. [ ] : Pipe sizes applicable to European installations are shown in parentheses.

# Dimensions

All measurements in mm.

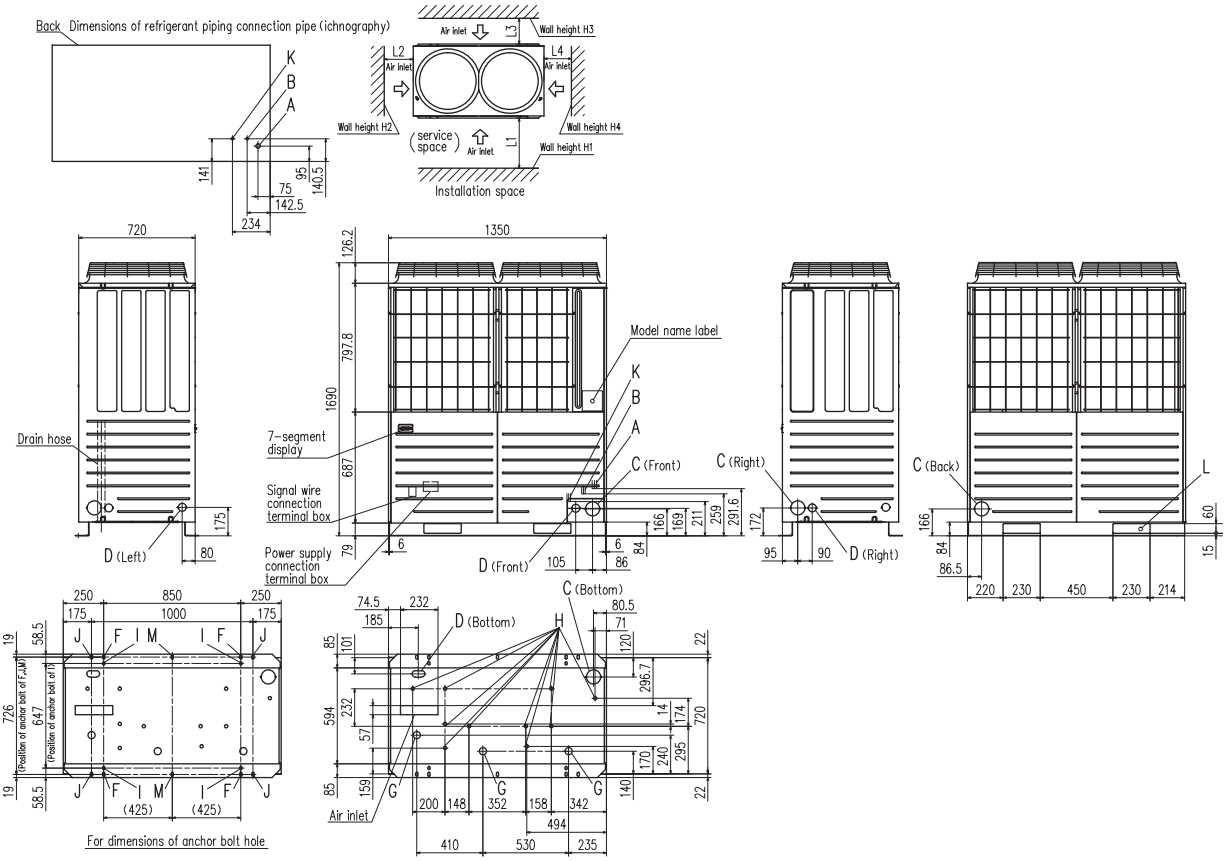


| Mark | Content | 280 | 335 |
|---|---|---|---|
| A | Refrigerant gas piping connection pipe | ø22.22(Brazing) | ø25.4(Brazing) |
| B | Refrigerant liquid piping connection pipe | ø9.52(Flare) | ø12.7(Flare) |
| C | Refrigerant piping exit hole | ø88(or ø100) | |
| D | Power supply entry hole | ø50 (right · left · front), long hole 40 x 80 (bottom) | |
| F | Anchor bolt hole | M10 x 4 places | |
| G | Drain waste water hose hole | ø45 x 3 places | |
| H | Drain hole | ø20 x 10 places | |
| K | Refrigerant oil equalization piping connection pipe | ø9.52(Flare) | |
| L | Carrying in or hole for hanging | 230 x 60 | |

| Installation example | | |
|---|---|---|
| Dimensions | 1 | 2 |
| $L_1$ | 500 | Open |
| $L_2$ | 10(30) | 10(30) |
| $L_3$ | 100 | 100 |
| $L_4$ | 10(30) | Open |
| $H_1$ | 1500 | Open |
| $H_2$ | No limit | No limit |
| $H_3$ | 1000 | No limit |
| $H_4$ | No limit | Open |

In case the ambient temperature becomes 43°C or higher during cooling operation

**When more than one unit is installed**

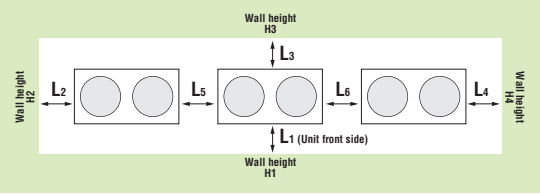


| Installation example | | |
|---|---|---|
| Dimensions | 1 | 2 |
| $L_1$ | 500 | Open |
| $L_2$ | 10(30) | 200 |
| $L_3$ | 100 | 300 |
| $L_4$ | 10(30) | Open |
| $L_5$ | 10(30) | 400 |
| $L_6$ | 10(30) | 400 |
| $H_1$ | 1500 | Open |
| $H_2$ | No limit | No limit |
| $H_3$ | 1000 | No limit |
| $H_4$ | No limit | Open |

In case the ambient temperature becomes 43°C or higher during cooling operation

# KXZ Outdoor units
# Heat pump systems 14, 16, 17, 18, 20HP (40.0kW~56.0kW)

| Model No. | Nominal Cooling Capacity |
|---|---|
| FDC400KXZE1 | 40.0kW |
| FDC450KXZE1 | 45.0kW |
| FDC475KXZE1 | 47.5kW |
| FDC500KXZE1 | 50.0kW |
| FDC560KXZE1 | 56.0kW |

- The KXZ heat pump 2-pipe systems offer high performance VRF for applications that require either cooling only or heating only, ideal for open plan areas.
- Connect up to 48 indoor units/up to 130% capacity.
- High efficiency with COP (in cooling) up to 3.6.
- KXZ employs DC inverter compressors ONLY.
- Industry leading total piping length up to 1000m and a maximum pipe run of 160m.

Uniform footprint of all models (from 14HP~20HP) allows continuous side-by-side installation

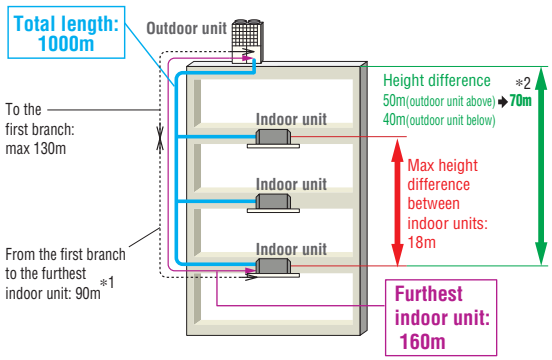


*1 The difference between the longest and the shortest indoor unit piping from the first branch must be within 40m. (MAX85m)
*2 In case of height difference up to 70m, please contact your dealer. Height difference up to 90m is possible with High Head series. Please refer to page 110.

**Range of operation**

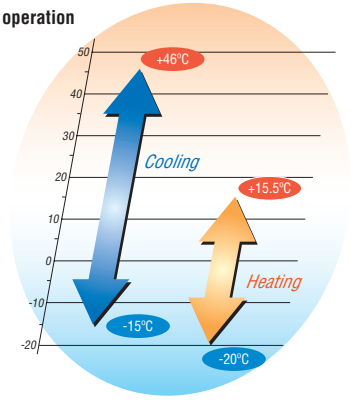


## Specifications

| Item | | | Model | FDC400KXZE1 | FDC450KXZE1 | FDC475KXZE1 | FDC500KXZE1 | FDC560KXZE1 |
|---|---|---|---|---|---|---|---|---|
| Nominal horse power | | | | 14HP | 16HP | 17HP | 18HP | 20HP |
| Power source | | | | 3 Phase 380-415V, 50Hz | | | | |
| Starting current | | | A | 5 | | 8 | | |
| Max current | | | A | 32 | | 42.4 | | |
| Nominal capacity | Cooling | | kW | 40.0 | 45.0 | 47.5 | 50.0 | 56.0 |
| | Heating | | | 45.0 | 50.0 | 53.0 | 56.0 | 63.0 |
| Electrical characteristics | Power consumption | Cooling | kW | 10.96 | 13.98 | 13.98 | 13.97 | 16.62 |
| | | Heating | | 10.69 | 12.50 | 13.00 | 13.49 | 15.95 |
| Exterior dimensions | HxWxD | | mm | 2048x1350x720 | | | | |
| Net weight | | | kg | 317 | | 370 | | |
| Refrigerant charge | R410A | | kg | 11.5 | | | | |
| Sound pressure level | Cooling/Heating | | dB(A) | 60/62 | 61/62 | 61/61 | 61/62 | 64/66 |
| Refrigerant piping size | Liquid line | | mm(in) | ø12.7(1/2") | | | | |
| | Gas line | | | ø25.4(1") [ø28.58(1 1/8")] | ø28.58(1 1/8") | | | |
| Capacity connection | | | % | 50~130 | | | | |
| Number of connectable indoor units | | | | 34 | 39 | 41 | 43 | 48 |

1. The data are measured under the following conditions(ISO-T1). Cooling: Indoor temp. of 27°CDB, 19°CWB, and outdoor temp. of 35°CDB. Heating: Indoor temp. of 20°CDB, and outdoor temp. of 7°CDB, 6°CWB. Piping length is 7.5m.
2. Sound pressure level indicates the value in an anechoic chamber. During operation these values are somewhat higher due to ambient conditions.
3. [ ] : Pipe sizes applicable to European installations are shown in parentheses.

# Dimensions

All measurements in mm.

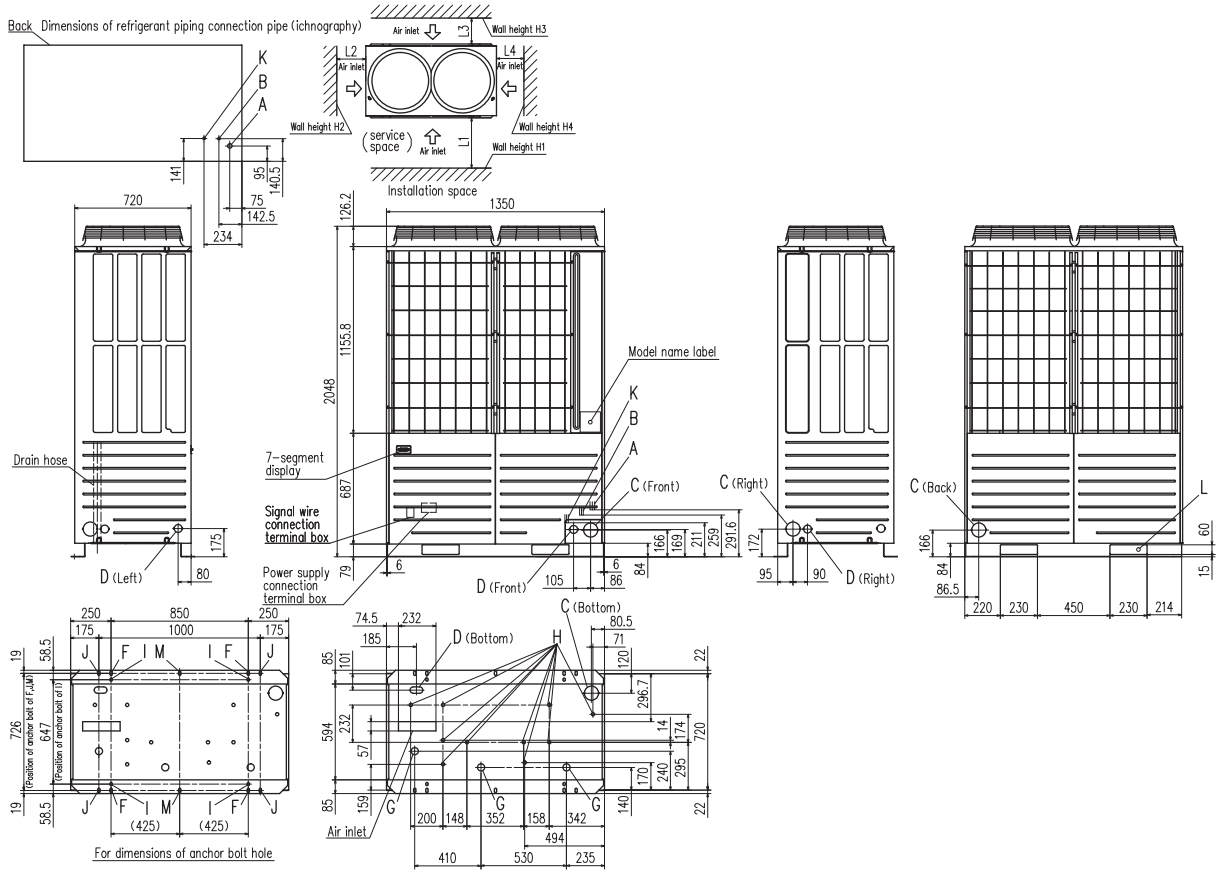


| Mark | Content | 400 | 450, 475, 500, 560 |
|---|---|---|---|
| A | Refrigerant gas piping connection pipe | ø25.4(Brazing) | ø28.58(Brazing) |
| B | Refrigerant liquid piping connection pipe | ø12.7(Flare) | |
| C | Refrigerant piping exit hole | ø88(or ø100) | |
| D | Power supply entry hole | ø50 (right · left · front), long hole 40 x 80 (bottom) | |
| F | Anchor bolt hole | M10 x 4 places | |
| G | Drain waste water hose hole | ø45 x 3 places | |
| H | Drain hole | ø20 x 10 places | |
| K | Refrigerant oil equalization piping connection pipe | ø9.52(Flare) | |
| L | Carrying in or hole for hanging | 230 x 60 | |

| Installation example | | |
|---|---|---|
| Dimensions | 1 | 2 |
| $L_1$ | 500 | Open |
| $L_2$ | 10(30) | 10(30) |
| $L_3$ | 100 | 100 |
| $L_4$ | 10(30) | Open |
| $H_1$ | 1500 | Open |
| $H_2$ | No limit | No limit |
| $H_3$ | 1000 | No limit |
| $H_4$ | No limit | Open |

In case the ambient temperature becomes 43°C or higher during cooling operation

# KXZ Outdoor units
# Heat pump combination systems
# 22, 24HP (61.5kW, 67.0kW)

| Model No. | Nominal Cooling Capacity |
|---|---|
| FDC615KXZE1 (FDC280+FDC335) | 61.5kW |
| FDC670KXZE1 (FDC335+FDC335) | 67.0kW |

- The KXZ heat pump 2-pipe systems offer high performance VRF for applications that require either cooling only or heating only, ideal for open plan areas.
- Connect up to 58 indoor units/up to 130% capacity.
- High efficiency with COP (in cooling) up to 3.8.
- KXZ employs DC inverter compressors ONLY.
- Industry leading total piping length up to 1000m and a maximum pipe run of 160m.

Uniform footprint of all models (from 22HP, 24HP) allows continuous side-by-side installation

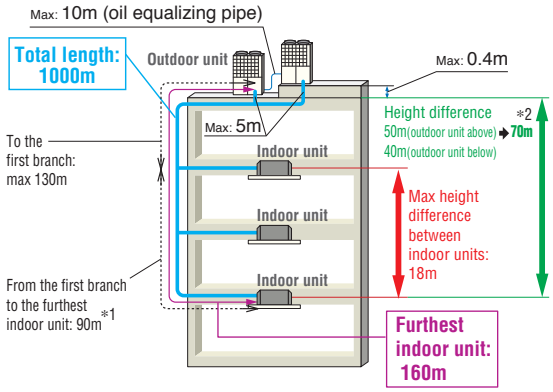


∗1 The difference between the longest and the shortest indoor unit piping from the first branch must be within 40m. (MAX85m)
∗2 In case of height difference up to 70m, please contact your dealer. Height difference up to 90m is possible with High Head series. Please refer to page 110.

**Range of operation**

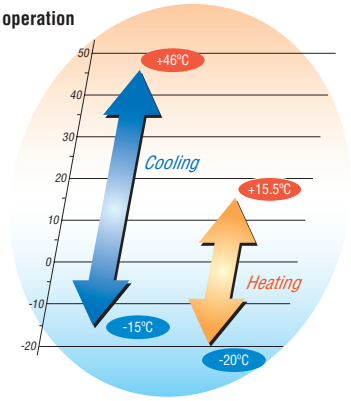


## Specifications

| Item | | | Model | FDC615KXZE1 | FDC670KXZE1 |
|---|---|---|---|---|---|
| Combination (FDC) | | | | 280KXZE1 | 335KXZE1 |
| | | | | 335KXZE1 | 335KXZE1 |
| Nominal horse power | | | | 22HP | 24HP |
| Power source | | | | 3 Phase 380-415V, 50Hz | |
| Starting current | | | A | 10 | |
| Max current | | | A | 42.4 | |
| Nominal capacity | Cooling | | kW | 61.5 | 67.0 |
| | Heating | | | 69.0 | 75.0 |
| Electrical characteristics | Power consumption | Cooling | kW | 16.20 | 17.92 |
| | | Heating | | 16.32 | 18.08 |
| Exterior dimensions | HxWxD | | mm | 1690x2700x720 | |
| Net weight | | | kg | 544 | |
| Refrigerant charge | R410A | | kg | 11.0x2 | |
| Refrigerant piping size | Liquid line | | mm(in) | ø12.7(1/2") | |
| | Gas line | | | ø28.58(1 1/8") | |
| Capacity connection | | | % | 50~130 | |
| Number of connectable indoor units | | | | 53 | 58 |

1. The data are measured under the following conditions(ISO-T1). Cooling: Indoor temp. of 27°CDB, 19°CWB, and outdoor temp. of 35°CDB. Heating: Indoor temp. of 20°CDB, and outdoor temp. of 7°CDB, 6°CWB. Piping length is 7.5m.
2. Sound pressure level indicates the value in an anechoic chamber. During operation these values are somewhat higher due to ambient conditions.

# Dimensions

All measurements in mm.

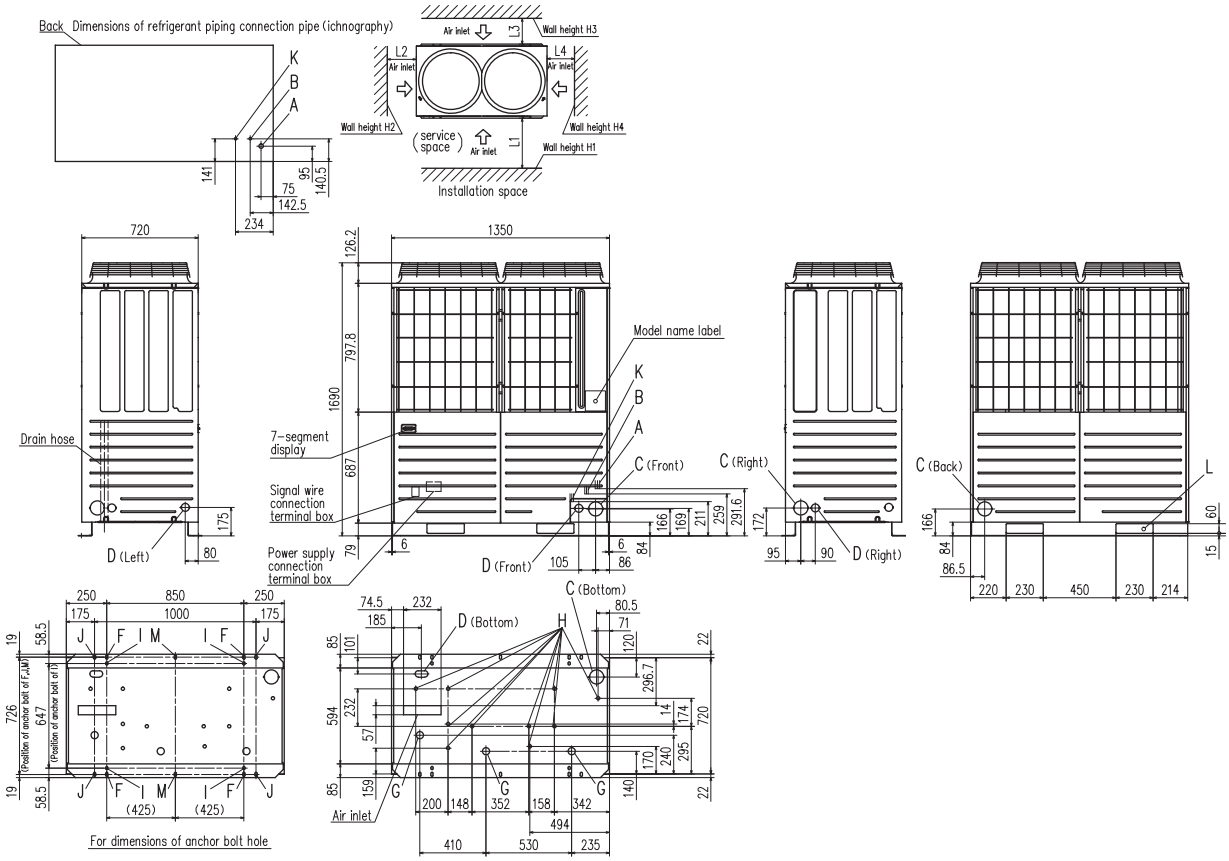


| Mark | Content | 280 | 335 |
|---|---|---|---|
| A | Refrigerant gas piping connection pipe | ø22.22(Brazing) | ø25.4(Brazing) |
| B | Refrigerant liquid piping connection pipe | ø9.52(Flare) | ø12.7(Flare) |
| C | Refrigerant piping exit hole | ø88(or ø100) | |
| D | Power supply entry hole | ø50 (right · left · front), long hole 40 x 80 (bottom) | |
| F | Anchor bolt hole | M10 x 4 places | |
| G | Drain waste water hose hole | ø45 x 3 places | |
| H | Drain hole | ø20 x 10 places | |
| K | Refrigerant oil equalization piping connection pipe | ø9.52(Flare) | |
| L | Carrying in or hole for hanging | 230 x 60 | |

| Installation example | | |
|---|---|---|
| Dimensions | 1 | 2 |
| $L_1$ | 500 | Open |
| $L_2$ | 10(30) | 10(30) |
| $L_3$ | 100 | 100 |
| $L_4$ | 10(30) | Open |
| $H_1$ | 1500 | Open |
| $H_2$ | No limit | No limit |
| $H_3$ | 1000 | No limit |
| $H_4$ | No limit | Open |

In case the ambient temperature becomes 43°C or higher during cooling operation

# KXZ Outdoor units
# Heat pump combination systems
# 26, 28, 30, 32, 34, 36, 38, 40HP (73.5kW~112.0kW)

| Model No. | | Nominal Cooling Capacity |
|---|---|---|
| FDC735KXZE1 | (FDC335+FDC400) | 73.5kW |
| FDC800KXZE1 | (FDC400+FDC400) | 80.0kW |
| FDC850KXZE1 | (FDC400+FDC450) | 85.0kW |
| FDC900KXZE1 | (FDC450+FDC450) | 90.0kW |
| FDC950KXZE1 | (FDC475+FDC475) | 95.0kW |
| FDC1000KXZE1 | (FDC500+FDC500) | 100.0kW |
| FDC1060KXZE1 | (FDC500+FDC560) | 106.0kW |
| FDC1120KXZE1 | (FDC560+FDC560) | 112.0kW |

- The KXZ heat pump 2-pipe systems offer high performance VRF for applications that require either cooling only or heating only, ideal for open plan areas.
- Connect up to 80 indoor units/up to 130% capacity.
- High efficiency with COP (in cooling) up to 3.7.
- KXZ employs DC inverter compressors ONLY.
- Industry leading total piping length up to 1000m and a maximum pipe run of 160m.

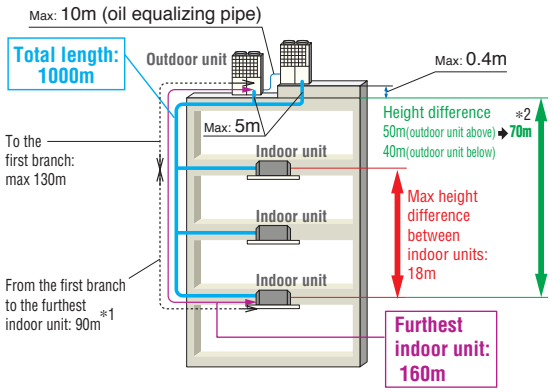


＊1 The difference between the longest and the shortest indoor unit piping from the first branch must be within 40m. (MAX85m)
＊2 In case of height difference up to 70m, please contact your dealer. Height difference up to 90m is possible with High Head series. Please refer to page 110.

**Range of operation**

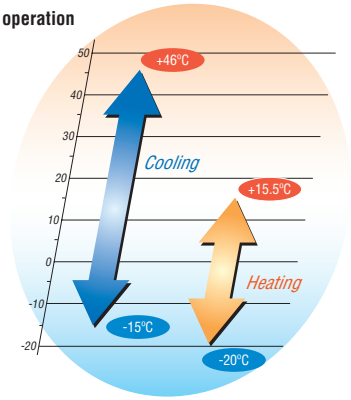


## Specifications

＊Exterior dimension : Please refor to page 29.

| Item | | | Model | FDC735KXZE1 | FDC800KXZE1 | FDC850KXZE1 | FDC900KXZE1 | FDC950KXZE1 | FDC1000KXZE1 | FDC1060KXZE1 | FDC1120KXZE1 |
|---|---|---|---|---|---|---|---|---|---|---|---|
| Combination (FDC) | | | | 335KXZE1＊ | 400KXZE1 | 400KXZE1 | 450KXZE1 | 475KXZE1 | 500KXZE1 | 500KXZE1 | 560KXZE1 |
| | | | | 400KXZE1 | 400KXZE1 | 450KXZE1 | 450KXZE1 | 475KXZE1 | 500KXZE1 | 560KXZE1 | 560KXZE1 |
| Nominal horse power | | | | 26HP | 28HP | 30HP | 32HP | 34HP | 36HP | 38HP | 40HP |
| Power source | | | | 3 Phase 380-415V, 50Hz | | | | | | | |
| Starting current | | | A | 10 | | | | 16 | | | |
| Max current | | | A | 53.2 | 64 | | | 84.8 | | | |
| Nominal capacity | Cooling | | kW | 73.5 | 80.0 | 85.0 | 90.0 | 95.0 | 100.0 | 106.0 | 112.0 |
| | Heating | | | 82.5 | 90.0 | 95.0 | 100.0 | 106.0 | 112.0 | 119.0 | 126.0 |
| Electrical characteristics | Power consumption | Cooling | kW | 19.92 | 21.92 | 24.94 | 27.96 | 27.96 | 27.94 | 30.59 | 33.24 |
| | | Heating | | 19.73 | 21.38 | 23.19 | 25.00 | 26.00 | 26.98 | 29.44 | 31.90 |
| Exterior dimensions | HxWxD | | mm | 2048x2700x720 | | | | | | | |
| Net weight | | | kg | 589 | 634 | | | 740 | | | |
| Refrigerant charge | R410A | | kg | 11.0+11.5 | 11.5x2 | | | | | | |
| Refrigerant piping size | Liquid line | | mm(in) | ø15.88(5/8") | | | | | | ø19.05(3/4") | |
| | Gas line | | | ø31.75(1 1/4") [ø34.92(1 3/8")] | | | | | | ø38.1(1 1/2") [ø34.92(1 3/8")] | |
| Capacity connection | | | % | 50~130 | | | | | | | |
| Number of connectable indoor units | | | | 63 | 69 | 73 | 78 | 80 | | | |

1. The data are measured under the following conditions(ISO-T1). Cooling: Indoor temp. of 27°CDB, 19°CWB, and outdoor temp. of 35°CDB. Heating: Indoor temp. of 20°CDB, and outdoor temp. of 7°CDB, 6°CWB. Piping length is 7.5m.
2. Sound pressure level indicates the value in an anechoic chamber. During operation these values are somewhat higher due to ambient conditions.
3. [ ] : Pipe sizes applicable to European installations are shown in parentheses.

# Dimensions

All measurements in mm.

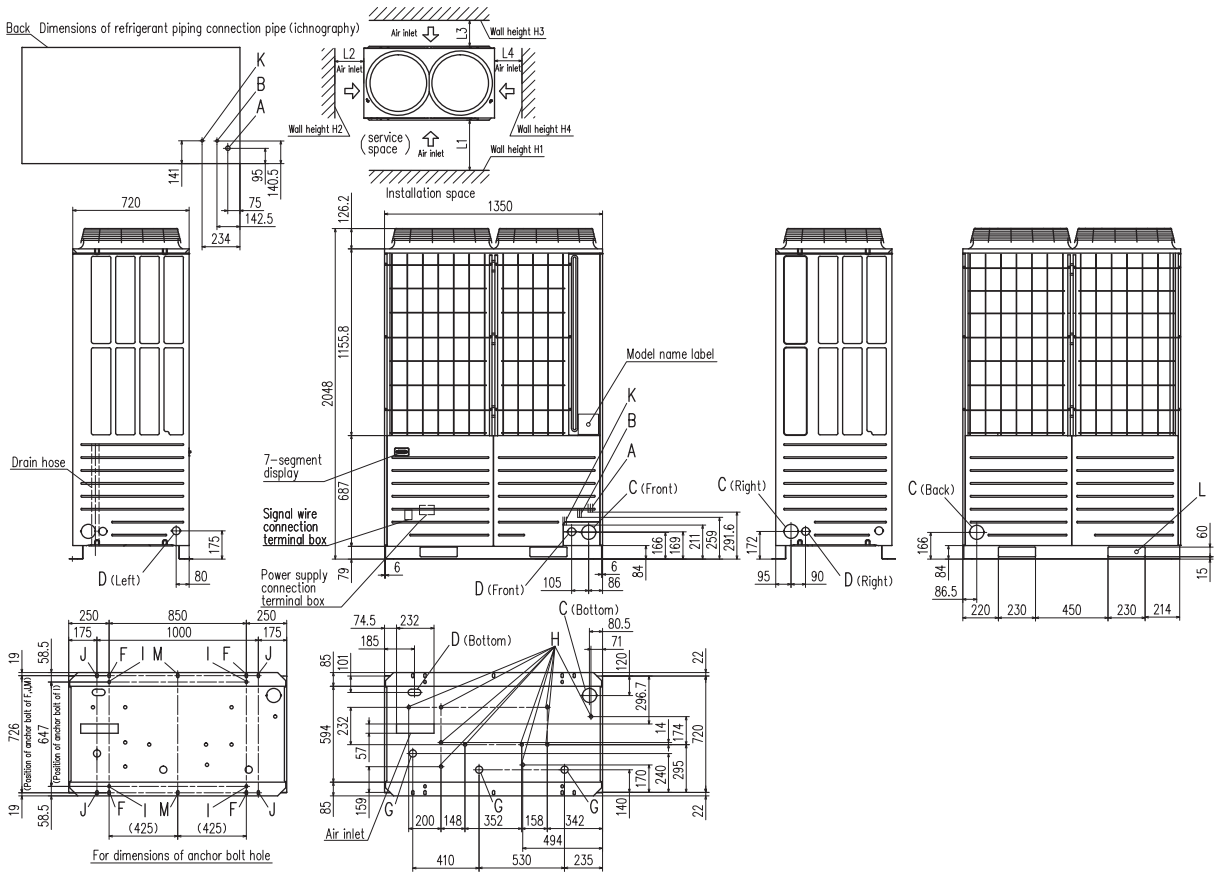


| Mark | Content | 400 | 450, 475, 500, 560 |
|---|---|---|---|
| A | Refrigerant gas piping connection pipe | ø25.4(Brazing) | ø28.58(Brazing) |
| B | Refrigerant liquid piping connection pipe | ø12.7(Flare) | |
| C | Refrigerant piping exit hole | ø88(or ø100) | |
| D | Power supply entry hole | ø50 (right · left · front), long hole 40 x 80 (bottom) | |
| F | Anchor bolt hole | M10 x 4 places | |
| G | Drain waste water hose hole | ø45 x 3 places | |
| H | Drain hole | ø20 x 10 places | |
| K | Refrigerant oil equalization piping connection pipe | ø9.52(Flare) | |
| L | Carrying in or hole for hanging | 230 x 60 | |

| Installation example | | |
|---|---|---|
| Dimensions | 1 | 2 |
| $L_1$ | 500 | Open |
| $L_2$ | 10(30) | 10(30) |
| $L_3$ | 100 | 100 |
| $L_4$ | 10(30) | Open |
| $H_1$ | 1500 | Open |
| $H_2$ | No limit | No limit |
| $H_3$ | 1000 | No limit |
| $H_4$ | No limit | Open |

In case the ambient temperature becomes 43°C or higher during cooling operation

# KXZ Outdoor units
# Heat pump combination systems
# 42, 44, 46, 48, 50, 52, 54, 56, 58, 60HP (120.0kW~168.0kW)

| Model No. | Nominal Cooling Capacity |
|---|---|
| FDC1200KXZE1 (FDC400+FDC400+FDC400) | 120.0kW |
| FDC1250KXZE1 (FDC400+FDC400+FDC450) | 125.0kW |
| FDC1300KXZE1 (FDC400+FDC450+FDC450) | 130.0kW |
| FDC1350KXZE1 (FDC450+FDC450+FDC450) | 135.0kW |
| FDC1425KXZE1 (FDC475+FDC475+FDC475) | 142.5kW |
| FDC1450KXZE1 (FDC475+FDC475+FDC500) | 145.0kW |
| FDC1500KXZE1 (FDC500+FDC500+FDC500) | 150.0kW |
| FDC1560KXZE1 (FDC500+FDC500+FDC560) | 156.0kW |
| FDC1620KXZE1 (FDC500+FDC560+FDC560) | 162.0kW |
| FDC1680KXZE1 (FDC560+FDC560+FDC560) | 168.0kW |

- The KXZ heat pump 2-pipe systems offer high performance VRF for applications that require either cooling only or heating only, ideal for open plan areas.
- Connect up to 80 indoor units/up to 130% capacity.
- High efficiency with COP (in cooling) up to 3.6.
- KXZ employs DC inverter compressors ONLY.
- Industry leading total piping length up to 1000m and a maximum pipe run of 160m.

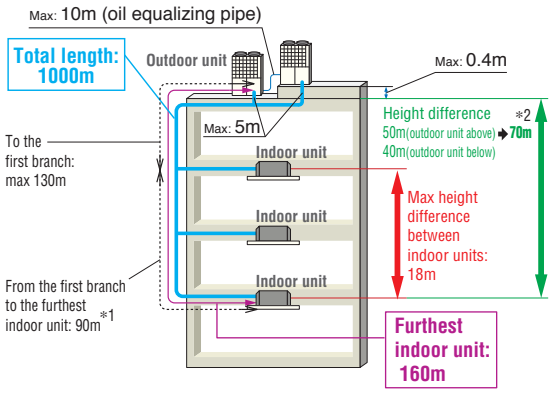


*1 The difference between the longest and the shortest indoor unit piping from the first branch must be within 40m. (MAX85m)
*2 In case of height difference up to 70m, please contact your dealer. Height difference up to 90m is possible with High Head series. Please refer to page 110.

**Range of operation**

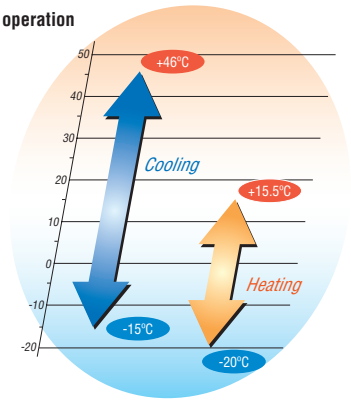


## Specifications

| Item | | | Model | FDC1200KXZE1 | FDC1250KXZE1 | FDC1300KXZE1 | FDC1350KXZE1 | FDC1425KXZE1 | FDC1450KXZE1 | FDC1500KXZE1 | FDC1560KXZE1 | FDC1620KXZE1 | FDC1680KXZE1 |
|---|---|---|---|---|---|---|---|---|---|---|---|---|---|
| Combination (FDC) | | | | 400KXZE1 | 400KXZE1 | 400KXZE1 | 450KXZE1 | 475KXZE1 | 475KXZE1 | 500KXZE1 | 500KXZE1 | 500KXZE1 | 560KXZE1 |
| | | | | 400KXZE1 | 400KXZE1 | 450KXZE1 | 450KXZE1 | 475KXZE1 | 475KXZE1 | 500KXZE1 | 500KXZE1 | 560KXZE1 | 560KXZE1 |
| | | | | 400KXZE1 | 450KXZE1 | 450KXZE1 | 450KXZE1 | 475KXZE1 | 500KXZE1 | 500KXZE1 | 560KXZE1 | 560KXZE1 | 560KXZE1 |
| Nominal horse power | | | | 42HP | 44HP | 46HP | 48HP | 50HP | 52HP | 54HP | 56HP | 58HP | 60HP |
| Power source | | | | 3 Phase 380-415V, 50Hz | | | | | | | | | |
| Starting current | | | A | 15 | | | | 24 | | | | | |
| Max current | | | A | 96 | | | | 127.2 | | | | | |
| Nominal capacity | Cooling | | kW | 120.0 | 125.0 | 130.0 | 135.0 | 142.5 | 145.0 | 150.0 | 156.0 | 162.0 | 168.0 |
| | Heating | | | 135.0 | 140.0 | 145.0 | 150.0 | 159.0 | 162.0 | 168.0 | 175.0 | 182.0 | 189.0 |
| Electrical characteristics | Power consumption | Cooling | kW | 32.88 | 35.90 | 38.92 | 41.90 | 41.94 | 41.93 | 41.91 | 44.56 | 47.21 | 49.86 |
| | | Heating | | 32.07 | 33.88 | 35.69 | 37.50 | 39.00 | 39.49 | 40.47 | 42.93 | 45.39 | 47.85 |
| Exterior dimensions | HxWxD | | mm | 2048x4050x720 | | | | | | | | | |
| Net weight | | | kg | 951 | | | | 1110 | | | | | |
| Refrigerant charge | R410A | | kg | 11.5x3 | | | | | | | | | |
| Refrigerant piping size | Liquid line | | mm(in) | ø19.05(3/4") | | | | | | | | | |
| | Gas line | | | ø38.1(1 1/2") [ø34.92(1 3/8")] | | | | | | | | | |
| Capacity connection | | | % | 50-130 | | | | | | | | | |
| Number of connectable indoor units | | | | 80 | | | | | | | | | |

1. The data are measured under the following conditions(ISO-T1). Cooling: Indoor temp. of 27°CDB, 19°CWB, and outdoor temp. of 35°CDB. Heating: Indoor temp. of 20°CDB, and outdoor temp. of 7°CDB, 6°CWB. Piping length is 7.5m.
2. Sound pressure level indicates the value in an anechoic chamber. During operation these values are somewhat higher due to ambient conditions.
3. [ ] : Pipe sizes applicable to European installations are shown in parentheses.

# Dimensions

All measurements in mm.

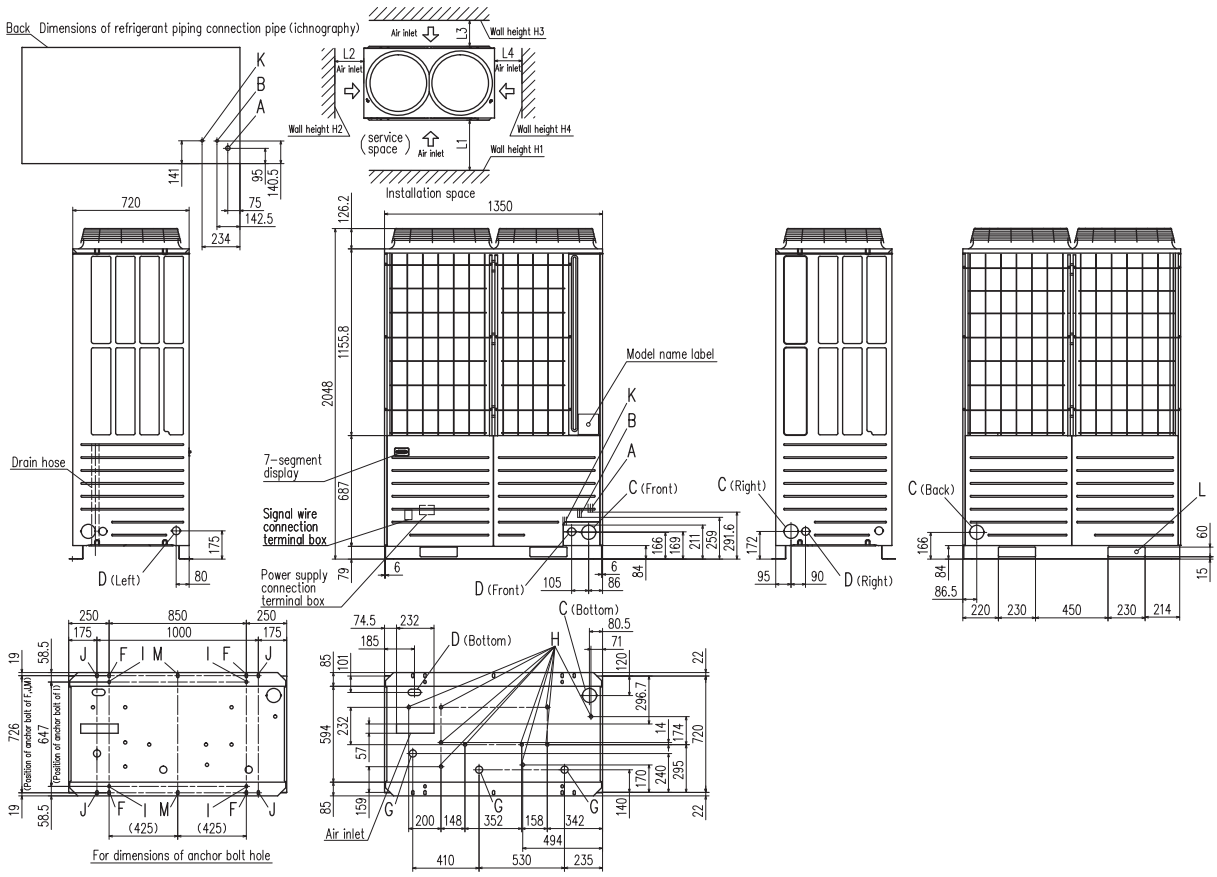


| Mark | Content | 400 | 450, 475, 500, 560 |
|---|---|---|---|
| A | Refrigerant gas piping connection pipe | ø25.4(Brazing) | ø28.58(Brazing) |
| B | Refrigerant liquid piping connection pipe | ø12.7(Flare) | |
| C | Refrigerant piping exit hole | ø88(or ø100) | |
| D | Power supply entry hole | ø50 (right · left · front), long hole 40 x 80 (bottom) | |
| F | Anchor bolt hole | M10 x 4 places | |
| G | Drain waste water hose hole | ø45 x 3 places | |
| H | Drain hole | ø20 x 10 places | |
| K | Refrigerant oil equalization piping connection pipe | ø9.52(Flare) | |
| L | Carrying in or hole for hanging | 230 x 60 | |

| Installation example | | |
|---|---|---|
| Dimensions | 1 | 2 |
| $L_1$ | 500 | Open |
| $L_2$ | 10(30) | 10(30) |
| $L_3$ | 100 | 100 |
| $L_4$ | 10(30) | Open |
| $H_1$ | 1500 | Open |
| $H_2$ | No limit | No limit |
| $H_3$ | 1000 | No limit |
| $H_4$ | No limit | Open |

In case the ambient temperature becomes 43°C or higher during cooling operation

# KXZ Outdoor units
# Hi-COP series 8~36HP (22.4kW~100.0kW)

| Model No. | Nominal Cooling Capacity |
|---|---|
| FDC224KXZXE1 | 22.4kW |
| FDC280KXZXE1 | 28.0kW |
| FDC335KXZXE1 | 33.5kW |

| Model No. | | Nominal Cooling Capacity |
|---|---|---|
| FDC450KXZXE1 | (FDC224+FDC224) | 45.0kW |
| FDC500KXZXE1 | (FDC224+FDC280) | 50.0kW |
| FDC560KXZXE1 | (FDC280+FDC280) | 56.0kW |
| FDC615KXZXE1 | (FDC280+FDC335) | 61.5kW |
| FDC670KXZXE1 | (FDC335+FDC335) | 67.0kW |
| FDC735KXZXE1 | (FDC224+FDC224+FDC280) | 73.5kW |
| FDC800KXZXE1 | (FDC224+FDC280+FDC280) | 80.0kW |
| FDC850KXZXE1 | (FDC280+FDC280+FDC280) | 85.0kW |
| FDC900KXZXE1 | (FDC280+FDC280+FDC335) | 90.0kW |
| FDC950KXZXE1 | (FDC280+FDC335+FDC335) | 95.0kW |
| FDC1000KXZXE1 | (FDC335+FDC335+FDC335) | 100.0kW |

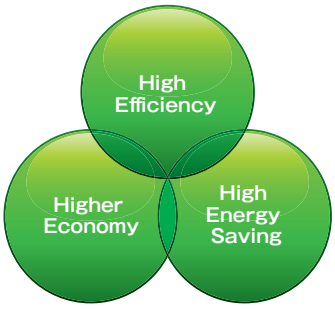

FDC224KXZXE1

FDC280KXZXE1
FDC335KXZXE1

## Indoor unit connection capacity

This series can connect indoor unit capacity up to 160~200%.

| kW | capacity connection |
|---|---|
| 22.4~45.0 | 200% |
| 50.0~100.0 | 160% |

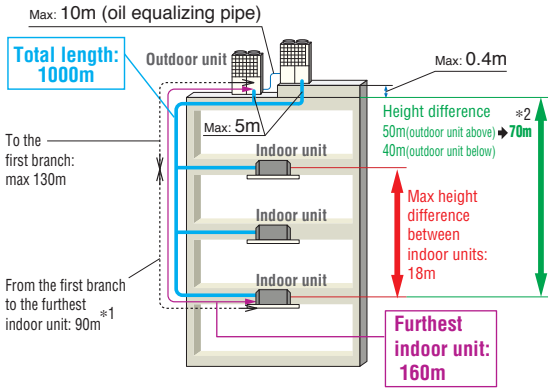


＊1 The difference between the longest and the shortest indoor unit piping from the first branch must be within 40m. (MAX85m)
＊2 In case of height difference up to 70m, please contact your dealer. Height difference up to 90m is possible with High Head series. Please refer to page 110.

Range of operation

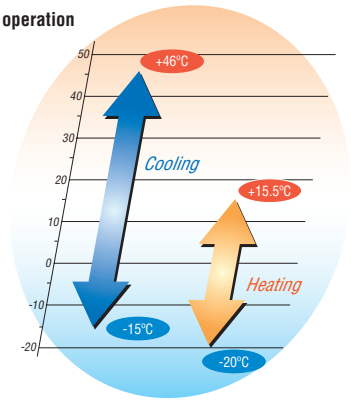

# Specifications

| Item | | | Model | FDC224KXZXE1 | FDC280KXZXE1 | FDC335KXZXE1 |
|---|---|---|---|---|---|---|
| Nominal horse power | | | | 8HP | 10HP | 12HP |
| Power source | | | | 3Phase 380~415V, 50Hz | | |
| Starting current | | | A | 5 | | |
| Max current | | | A | 21.2 | 32 | |
| Nominal capacity | Cooling | | kW | 22.4 | 28.0 | 33.5 |
| | Heating | | | 25.0 | 31.5 | 37.5 |
| Electrical characteristics | Power consumption | Cooling | kW | 4.98 | 6.95 | 8.68 |
| | | Heating | | 5.56 | 6.83 | 8.39 |
| Exterior dimensions | H x W x D | | mm | 1690x1350x720 | 2048x1350x720 | |
| Net weight | | | kg | 280 | 325 | |
| Refrigerant charge | R410A | | kg | 11.0 | 11.5 | |
| Sound pressure level | Cooling / Heating | | dB(A) | 56/57 | 56/56 | 62/57 |
| Refrigerant piping size | Liquid line | | mm(in) | ø9.52(3/8") | | ø12.7(1/2") |
| | Gas line | | | ø19.05(3/4") | ø22.22(7/8") | ø25.4(1")[ø22.22(7/8")] |
| Capacity connection | | | % | 200 | | |
| Number of connectable indoor units | | | | 29 | 37 | 44 |

| Item | | | Model | FDC450KXZXE1 | FDC500KXZXE1 | FDC560KXZXE1 | FDC615KXZXE1 | FDC670KXZXE1 |
|---|---|---|---|---|---|---|---|---|
| Combination (FDC) | | | | 224KXZXE1 | 224KXZXE1 | 280KXZXE1 | 280KXZXE1 | 335KXZXE1 |
| | | | | 224KXZXE1 | 280KXZXE1 | 280KXZXE1 | 335KXZXE1 | 335KXZXE1 |
| Nominal horse power | | | | 16HP | 18HP | 20HP | 22HP | 24HP |
| Power source | | | | 3Phase 380~415V, 50Hz | | | | |
| Starting current | | | A | 10 | | | | |
| Max current | | | A | 42.4 | 53.2 | 64 | | |
| Nominal capacity | Cooling | | kW | 45.0 | 50.0 | 56.0 | 61.5 | 67.0 |
| | Heating | | | 50.0 | 56.0 | 63.0 | 69.0 | 75.0 |
| Electrical characteristics | Power consumption | Cooling | kW | 10.0 | 11.8 | 13.9 | 15.6 | 17.4 |
| | | Heating | | 11.1 | 12.3 | 13.7 | 15.2 | 16.8 |
| Exterior dimensions | H x W x D | | mm | 1690x2700x720 | 2048x2700x720 | | | |
| Net weight | | | kg | 560 | 605 | 650 | 650 | 650 |
| Refrigerant charge | R410A | | kg | 11.0x2 | 11.0+11.5 | 11.5x2 | | |
| Refrigerant piping size | Liquid line | | mm(in) | ø12.7(1/2") | | | | |
| | Gas line | | | ø28.58(1 1/8") | | | | |
| | Oil equalization | | | ø9.52(3/8") | | | | |
| Capacity connection | | | % | 200 | 160 | | | |
| Number of connectable indoor units | | | | 60 | 53 | 59 | 65 | 71 |

| Item | | | Model | FDC735KXZXE1 | FDC800KXZXE1 | FDC850KXZXE1 | FDC900KXZXE1 | FDC950KXZXE1 | FDC1000KXZXE1 |
|---|---|---|---|---|---|---|---|---|---|
| Combination (FDC) | | | | 224KXZXE1 | 224KXZXE1 | 280KXZXE1 | 280KXZXE1 | 280KXZXE1 | 335KXZXE1 |
| | | | | 224KXZXE1 | 280KXZXE1 | 280KXZXE1 | 280KXZXE1 | 335KXZXE1 | 335KXZXE1 |
| | | | | 280KXZXE1 | 280KXZXE1 | 280KXZXE1 | 335KXZXE1 | 335KXZXE1 | 335KXZXE1 |
| Nominal horse power | | | | 26HP | 28HP | 30HP | 32HP | 34HP | 36HP |
| Power source | | | | 3Phase 380~415V, 50Hz | | | | | |
| Starting current | | | A | 15 | | | | | |
| Max current | | | A | 74.4 | 85.2 | 96 | | | |
| Nominal capacity | Cooling | | kW | 73.5 | 80.0 | 85.0 | 90.0 | 95.0 | 100.0 |
| | Heating | | | 82.5 | 90.0 | 95.0 | 100.0 | 106.0 | 112.0 |
| Electrical characteristics | Power consumption | Cooling | kW | 17.1 | 19.3 | 21.1 | 22.7 | 24.3 | 25.9 |
| | | Heating | | 18.2 | 19.7 | 20.6 | 21.9 | 23.5 | 25.1 |
| Exterior dimensions | H x W x D | | mm | 2048x4050x720 | | | | | |
| Net weight | | | kg | 885 | 930 | 975 | 975 | | |
| Refrigerant charge | R410A | | kg | 11.0x2+11.5 | 11.0+11.5x2 | 11.5x3 | | | |
| Refrigerant piping size | Liquid line | | mm(in) | ø15.88(5/8") | | | | | |
| | Gas line | | | ø31.75(1 1/4")[ø34.92(1 3/8")] | | | | | Ø38.1(1/2")[ø34.92(1 3/8")] |
| | Oil equalization | | | ø9.52(3/8") | | | | | |
| Capacity connection | | | % | 160 | | | | | |
| Number of connectable indoor units | | | | 78 | 80 | 80 | 80 | 80 | 80 |

1. The data are measured under the following conditions(ISO-T1). Cooling: Indoor temp. of 27ºCDB, 19ºCWB, and outdoor temp. of 35ºCDB. Heating: Indoor temp. of 20ºCDB, and outdoor temp. of 7ºCDB, 6ºCWB. Piping length is 7.5m.
2. Sound pressure level indicates the value in an anechoic chamber. During operation these values are somewhat higher due to ambient conditions.
3. [ ] : Pipe sizes applicable to European installations are shown in parentheses.

# Dimensions

All measurements in mm.

## FDC224KXZXE1

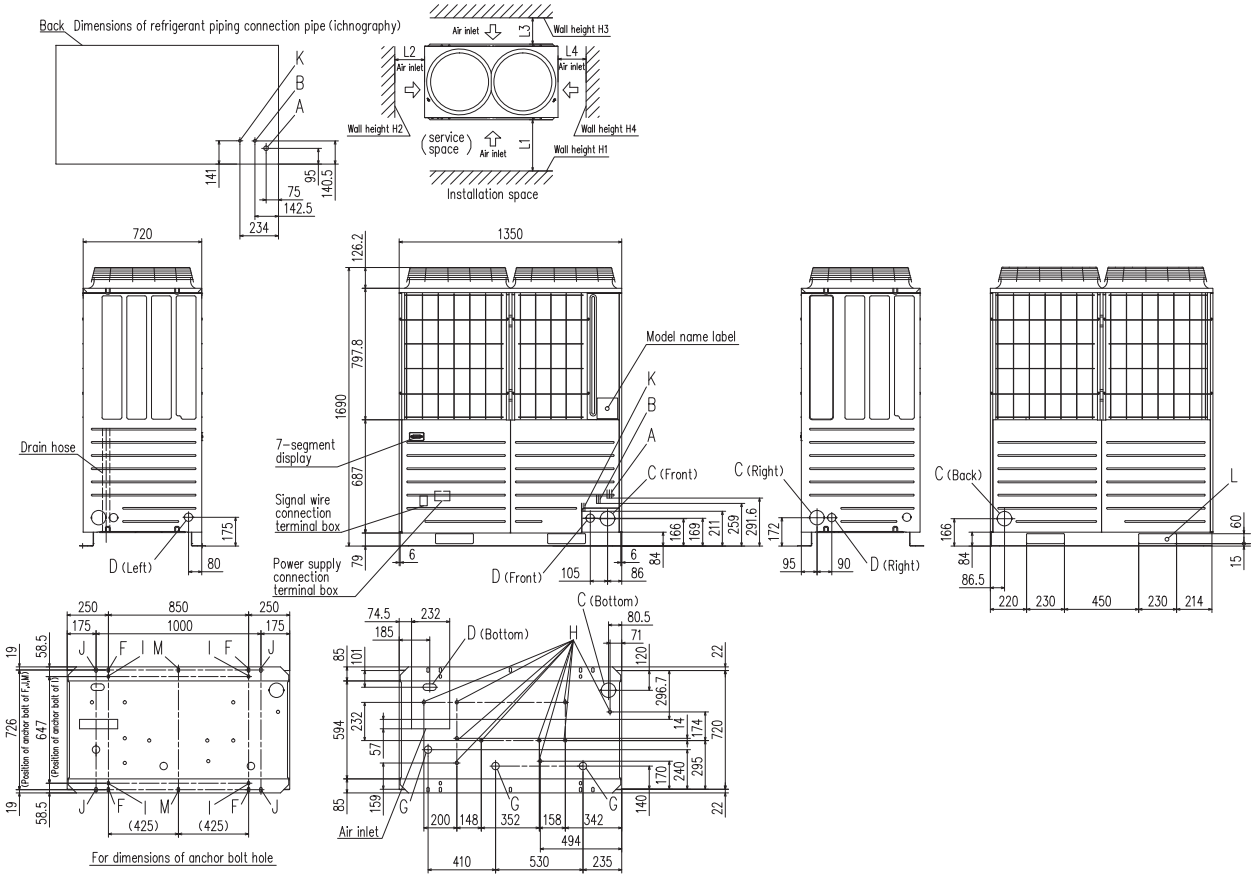


| Mark | Content | 224 |
|---|---|---|
| A | Refrigerant gas piping connection pipe | ø19.05 (Brazing) |
| B | Refrigerant liquid piping connection pipe | ø9.52 (Flare) |
| C | Refrigerant piping exit hole | ø88 (or ø100) |
| D | Power supply entry hole | ø50 (Right · Left · Front), Long hole 40 x 80 (Bottom) |
| F | Anchor bolt hole | M10 x 4 places |
| G | Drain waste water hose hole | ø45 x 3 places |
| H | Drain hole | ø20 x 10 places |
| K | Refrigerant oil equalization piping connection pipe | ø9.52 (Flare) |
| L | Carrying in or hole for hanging | 230 x 60 |

| Installation example | | |
|---|---|---|
| Dimensions | 1 | 2 |
| $L_1$ | 500 | Open |
| $L_2$ | 10(30) | 10(30) |
| $L_3$ | 100 | 100 |
| $L_4$ | 10(30) | Open |
| $H_1$ | 1500 | Open |
| $H_2$ | No limit | No limit |
| $H_3$ | 1000 | No limit |
| $H_4$ | No limit | Open |

In case the ambient temperature becomes 43ºC or higher during cooling operation

## FDC280KXZXE1, 335KXZXE1

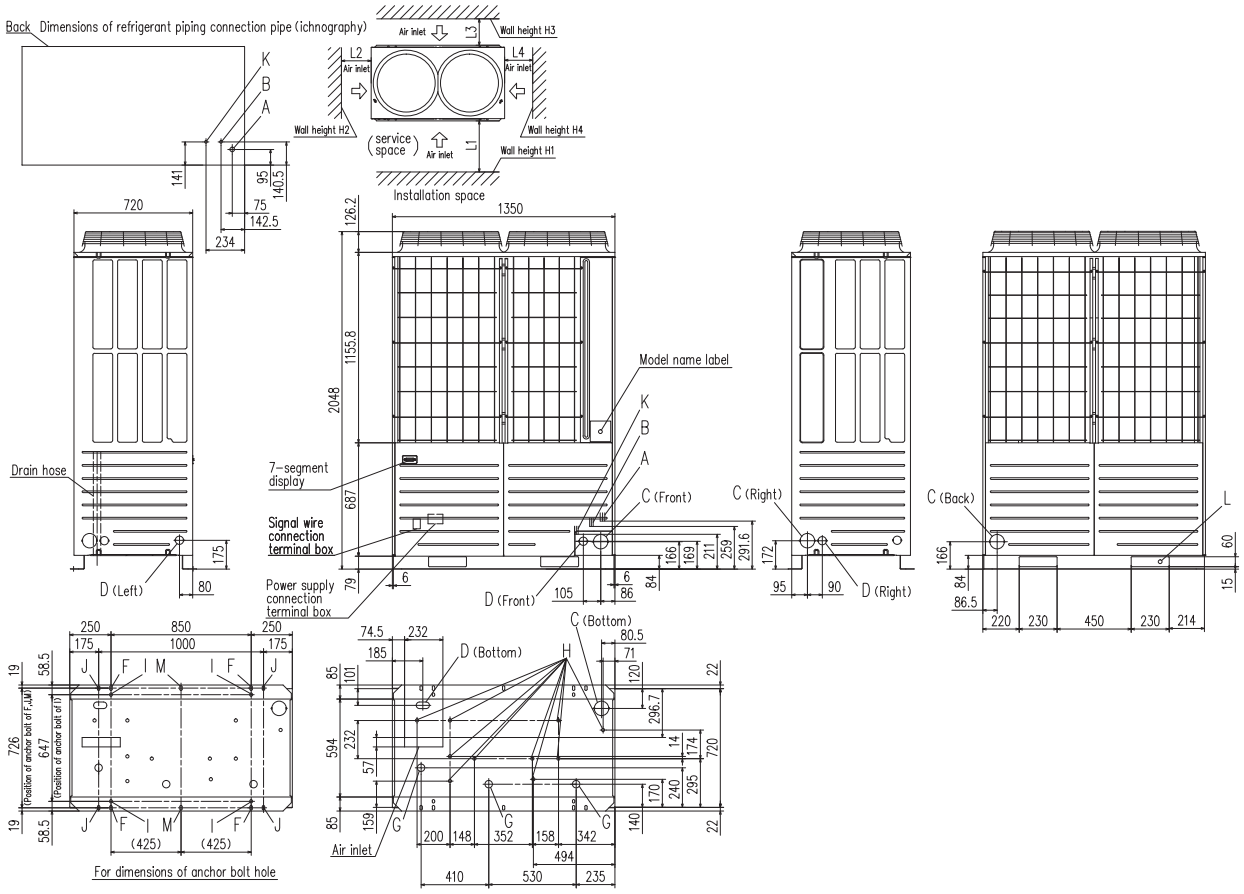


| Mark | Content | 280 | 335 |
|---|---|---|---|
| A | Refrigerant gas piping connection pipe | ø22.22 (Brazing) | ø25.4 (Brazing) |
| B | Refrigerant liquid piping connection pipe | ø9.52 (Flare) | ø12.7 (Flare) |
| C | Refrigerant piping exit hole | ø88 (or ø100) | |
| D | Power supply entry hole | ø50 (Right · Left · Front), Long hole 40 x 80 (Bottom) | |
| F | Anchor bolt hole | M10 x 4 places | |
| G | Drain waste water hose hole | ø45 x 3 places | |
| H | Drain hole | ø20 x 10 places | |
| K | Refrigerant oil equalization piping connection pipe | ø9.52(Flare) | |
| L | Carrying in or hole for hanging | 230 x 60 | |

| Installation example | | |
|---|---|---|
| Dimensions | 1 | 2 |
| $L_1$ | 500 | Open |
| $L_2$ | 10(30) | 10(30) |
| $L_3$ | 100 | 100 |
| $L_4$ | 10(30) | Open |
| $H_1$ | 1500 | Open |
| $H_2$ | No limit | No limit |
| $H_3$ | 1000 | No limit |
| $H_4$ | No limit | Open |

In case the ambient temperature becomes 43°C or higher during cooling operation

# Heat recovery systems - for simultaneous heating and cooling

The heat recovery systems operate with 3 inter-connecting pipes, thus commonly referred to as a '3-pipe system'.

The systems provide both heating and cooling operations to individual indoor units according to the room condition/requirement.
The systems incorporate highly sophisticated control to condition multiple indoor areas, whatever their requirement for cooling or heating, for applications where the building orientation (N, S, E, W) can mean that heat gain/loss varies on each side of the building.

The range starts from the 8HP model (22.4kW) cooling capacity, up to the largest capacity single outdoor unit in the industry (24HP) with 68.0kW cooling capacity. Outdoor units can also be “twinned” providing up to 48HP/136.0kW on a single system.

## KXRE6

| 8HP | 10HP | 12HP | 12HP | 14HP | 16HP |
|---|---|---|---|---|---|
| FDC224KXRE6 | FDC280KXRE6 | FDC335KXRE6 | FDC335KXRE6-K | FDC400KXRE6 | FDC450KXRE6 |

| 18HP | 20HP | 20HP | 22HP | 24HP |
|---|---|---|---|---|
| FDC504KXRE6 | FDC560KXRE6 | FDC560KXRE6-K | FDC615KXRE6 | FDC680KXRE6 |

| 26HP | 28HP | 30HP | 32HP | 34HP | 36HP |
|---|---|---|---|---|---|
| FDC735KXRE6 | FDC800KXRE6 | FDC850KXRE6 | FDC900KXRE6 | FDC960KXRE6 | FDC1010KXRE6 |
| 12+14 | 14+14 | 14+16 | 16+16 | 16+18 | 18+18 |
| FDC335KXRE6-K<br>FDC400KXRE6 | FDC400KXRE6<br>FDC400KXRE6 | FDC400KXRE6<br>FDC450KXRE6 | FDC450KXRE6<br>FDC450KXRE6 | FDC450KXRE6<br>FDC504KXRE6 | FDC504KXRE6<br>FDC504KXRE6 |

| 38HP | 40HP | 42HP | 44HP | 46HP | 48HP |
|---|---|---|---|---|---|
| FDC1065KXRE6 | FDC1130KXRE6 | FDC1180KXRE6 | FDC1235KXRE6 | FDC1300KXRE6 | FDC1360KXRE6 |
| 18+20 | 20+20 | 20+22 | 22+22 | 22+24 | 24+24 |
| FDC504KXRE6<br>FDC560KXRE6 | FDC560KXRE6<br>FDC560KXRE6 | FDC560KXRE6-K<br>FDC615KXRE6 | FDC615KXRE6<br>FDC615KXRE6 | FDC615KXRE6<br>FDC680KXRE6 | FDC680KXRE6<br>FDC680KXRE6 |

1.12HP, 20HP, 22HP & 24HP are applied 3D compressor.
2.FDC335KXRE6-K & FDC560KXRE6-K are only used for combining with other models.

### Capacity connection

| HP | KXRE6 |
|---|---|
| 8~16 | 200% |
| 18~34 | 160% |
| 36~48 | 130% |

- In case that capacity connection is more than 130%, additional charge of refrigerant is required on site.
- In case of 8-34HP of the systems, if one or more indoor units of FDK, FDFL,FDFU and/or FDFW series are connected to the system, the total connecting capacity of indoor units should not exceed 130%.

Up to 89 indoor units can be connected to the largest capacity outdoor unit, with a range of 17 types of exposed or concealed indoor unit, in several capacities, a choice of 89 indoor units is available.

※1 FDUT15KXE6F-E and FDTC15KXE6F can not be connected to the systems.

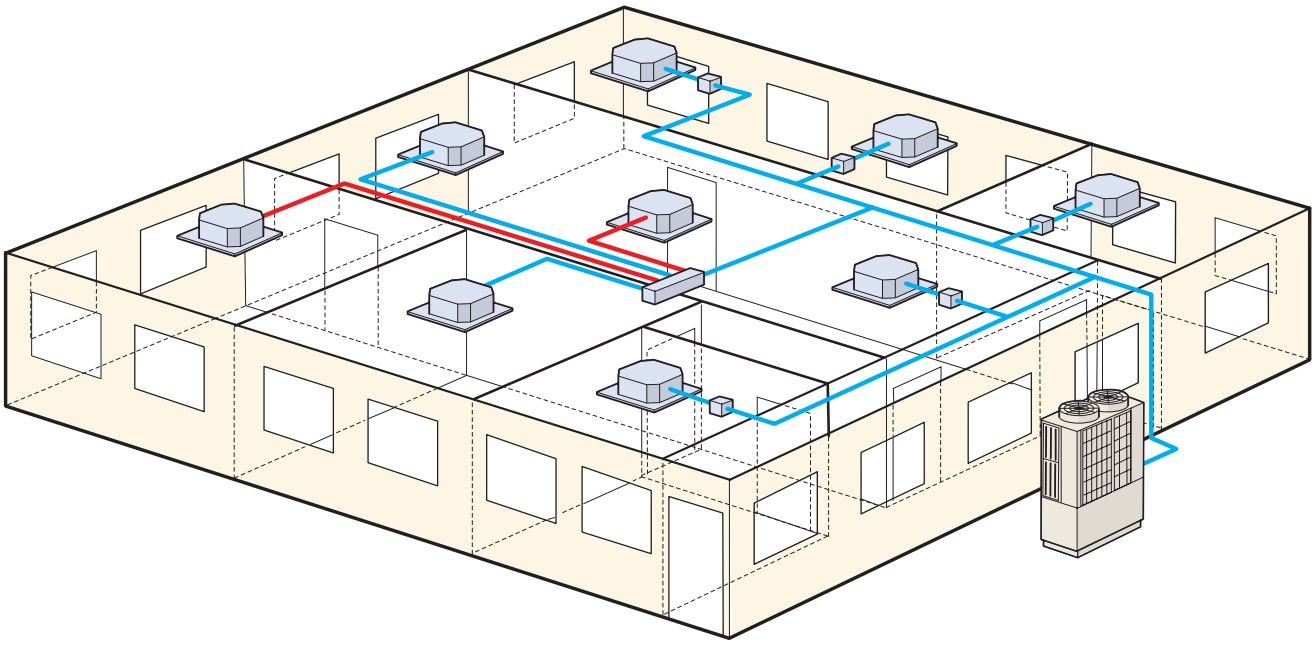

**Heat recovery systems - for simultaneous heating and cooling**

The system interconnecting pipework has a unique arrangement, with two of the interconnecting pipes routed through a PFD Distribution Controller, and the third pipe connected directly to each indoor unit from the main pipe run. This reduces installation time, and the number of brazed connections on site. The PFD Distribution Controllers are available for single connection, or as a combined PFD 4-way connection, with each connected unit having independent cooling or heating operation.

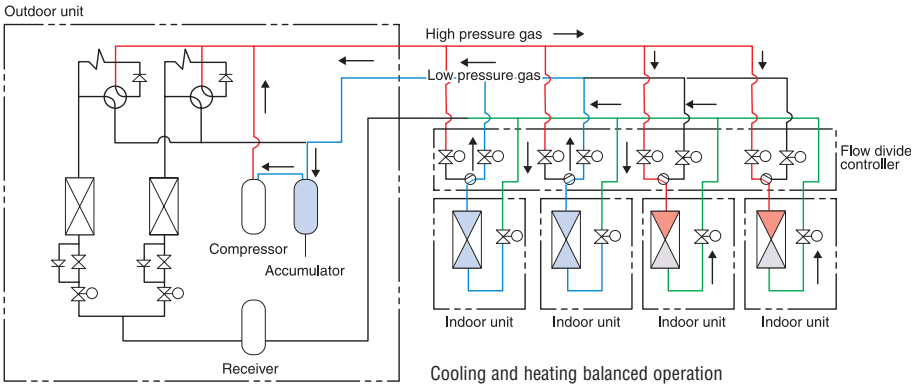


Cooling and heating balanced operation

During defrosting or during automatic protection of a compressor, which is activated every several hours in heating operation, heating operation temporarily stops and restarts after some period. The series has the same automatic protection of compressor in cooling operation also. During this protection period air flow only comes on and cooling operation restarts after some period.

This model is not suitable for the usage of annual cooling operation such as for the server room, especially in the area where the outdoor air temperature becomes below 5ºC. In case of mixed operation in cooling and heating mode below 5ºC of outdoor air temperature, the cooling capacity may decrease in comparison with that for the operation only in cooling mode.

# Heat recovery 3-pipe systems 8, 10, 12, 14, 16HP (22.4kW – 45.0kW) *for simultaneous heating and cooling*

| Model No. | Nominal Cooling Capacity |
|---|---|
| FDC224KXRE6 | 22.4kW |
| FDC280KXRE6 | 28.0kW |
| FDC335KXRE6 | 33.5kW |
| FDC400KXRE6 | 40.0kW |
| FDC450KXRE6 | 45.0kW |

Uniform footprint of all models (from 8HP~24 HP) allows continuous side-by-side installation

- Heat recovery systems offer high performance VRF for almost every type of building, with the capacity for simultaneous heating and cooling operations of individual indoor units. Energy efficiency is maximised by employing DC inverter compressors ONLY, and distributing surplus heat from cooling operations to areas where it is required (and vice versa) resulting in COP (in cooling) from 3.7 to 4.2.
- Connect from 50% up to 200% capacity indoor units.
- Industry leading total piping length up to 1000m and a maximum pipe run of 160m.

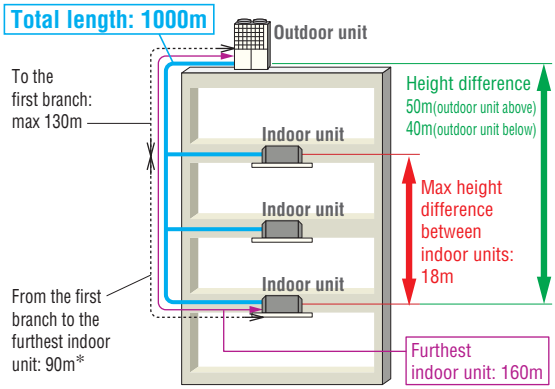


* The difference between the longest and the shortest indoor unit piping from the first branch must be within 40m.

**Range of operation**

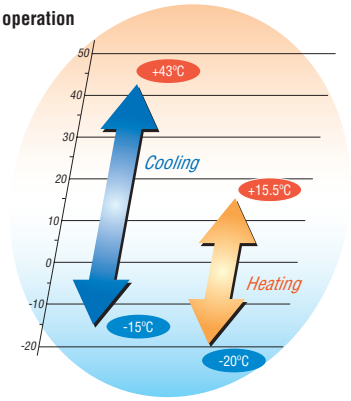


## Specifications

| Item | | | Model | FDC224KXRE6 | FDC280KXRE6 | FDC335KXRE6 | FDC400KXRE6 | FDC450KXRE6 |
|---|---|---|---|---|---|---|---|---|
| Nominal horse power | | | | 8HP | 10HP | 12HP | 14HP | 16HP |
| Power source | | | | 3 Phase 380-415V, 50Hz | | | | |
| Starting current | | | A | 5 | | | 8 | |
| Max current | | | A | 23.5 | | | 47 | |
| Nominal capacity | Cooling | | kW | 22.4 | 28.0 | 33.5 | 40.0 | 45.0 |
| | Heating | | | 25.0 | 31.5 | 37.5 | 45.0 | 50.0 |
| Electrical characteristics | Power consumption | Cooling | kW | 5.90 | 8.08 | 9.98 | 11.61 | 13.49 |
| | | Heating | | 5.90 | 8.11 | 9.55 | 11.93 | 13.32 |
| Exterior dimensions | HxWxD | | mm | 1690x1350x720 | | | | |
| Net weight | | | kg | 269 | | 273 | 358 | |
| Refrigerant charge | R410A | | kg | 8.7 | 9.9 | 11.4 | 11.5 | |
| Sound pressure level | Cooling/Heating | | dB(A) | 57/57 | 58/59 | 62/63 | 60/60 | 62.5/62.5 |
| Refrigerant piping size | Liquid line | | mm(in) | ø9.52(3/8") | | ø12.7(1/2") | | |
| | Suction Gas line | | | ø19.05(3/4") | ø25.4(1") [ø22.22(7/8")] | | ø25.4(1") [ø28.58(1 1/8")] | |
| | Discharge Gas line | | | ø15.88(5/8") | ø19.05(3/4") | | ø22.22(7/8") | |
| Capacity connection | | | % | 50~200 | | | | |
| Number of connectable indoor units | | | | 20 | 25 | 30 | 36 | 40 |

1. The data are measured under the following conditions(ISO-T1). Cooling: Indoor temp. of 27°CDB, 19°CWB, and outdoor temp. of 35°CDB. Heating: Indoor temp. of 20°CDB, and outdoor temp. of 7°CDB, 6°CWB. Piping length is 7.5m.
2. Sound pressure level indicates the value in an anechoic chamber. During operation these values are somewhat higher due to ambient conditions.
3. [ ] : Pipe sizes applicable to European installations are shown in parentheses.

# Dimensions

All measurements in mm.

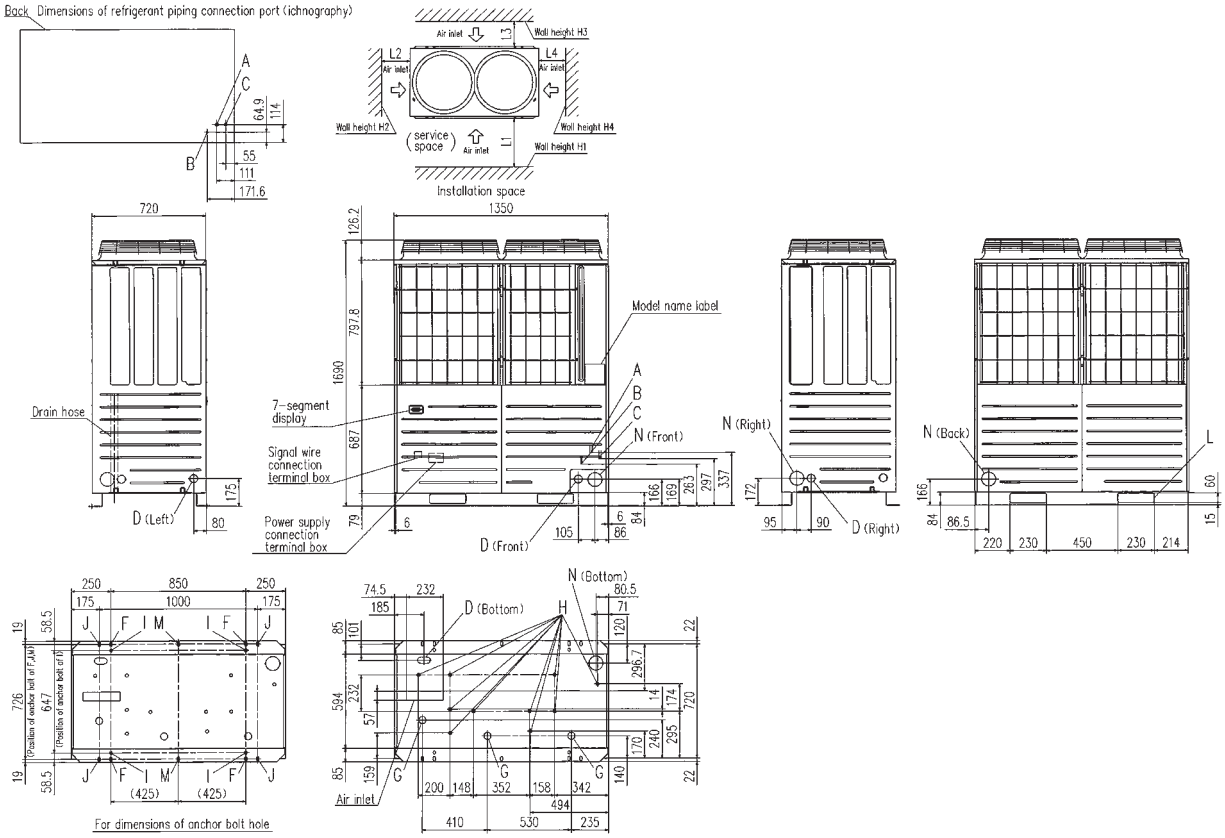


| Mark | Content | 224 | 280 | 335 | 335-K | 400 | 450 |
|---|---|---|---|---|---|---|---|
| A | Refrigerant suction gas piping connection entrance | ø19.05(Brazing) | ø22.22(Brazing) | ø25.4(Brazing) | | | ø28.58(Brazing) |
| B | Refrigerant liquid piping connection entrance | ø9.52(Flare) | | ø12.7(Flare) | | | |
| C | Refrigerant discharge gas piping connection entrance | ø15.88(Brazing) | ø19.05(Brazing) | | | ø22.22(Brazing) | |
| D | Power supply entry hole | ø50(right · left · front),long hole 40x80(under side) | | | | | |
| F | Anchor bolt hole | M10 x 4 places | | | | | |
| G | Drain waste water hose hole | ø45 x 3 places | | | | | |
| H | Drain hole | ø20 x 10 places | | | | | |
| K* | Refrigerant oil equalization piping connection entrance | ø9.52(Flare) | | | | | |
| L | Carrying in or hole for hanging | 230x60 | | | | | |
| N | Refrigerant piping exit hole | ø88(or ø100) | | | | | |

*14,16HP models only

Notes:
(1) Make sure to secure the unit with anchor bolts.
(2) Make sure to allow the space of 2m or more above the unit.
(3) Connect the refrigerant piping (suction gas side, discharge gas side, liquid side) at local site.
(4) The refrigerant piping connection entrance and the power supply intake are of the half blank shape. Cut it with the nipper etc., when you use.
(5) Use ø88 (or ø100) for the refrigerant piping connection entrance.
(6) Please use the anchor hole (M10x10) marked I and J and M for a renewal purpose.
(7) Please connect the oil equalization pipe marked K with only the outdoor combination unit. (for 14,16HP only)
(8) Please use combination trestle (option) when you use the trestle by outdoor combination unit. (for 14,16HP only)

| Installation example | | |
|---|---|---|
| Dimensions | 1 | 2 |
| $L_1$ | 500 | Open |
| $L_2$ | 10 | 10 |
| $L_3$ | 100 | 100 |
| $L_4$ | 10 | Open |
| $H_1$ | 1500 | Open |
| $H_2$ | No limit | No limit |
| $H_3$ | 1000 | No limit |
| $H_4$ | No limit | Open |

# Heat recovery 3-pipe systems 18, 20, 22, 24HP (50.4kW – 68.0kW) *for simultaneous heating and cooling*

| Model No. | Nominal Cooling Capacity |
|---|---|
| FDC504KXRE6 | 50.4kW |
| FDC560KXRE6 | 56.0kW |
| FDC615KXRE6 | 61.5kW |
| FDC680KXRE6 | 68.0kW |

Uniform footprint of all models (from 8HP~24HP) allows continuous side-by-side installation

- Heat recovery systems offer high performance VRF for almost every type of building, with the capacity for simultaneous heating and cooling operations of individual indoor units. Energy efficiency is maximised by employing DC inverter compressors ONLY, and distributing surplus heat from cooling operations to areas where it is required (and vice versa) resulting in COP (in cooling) from 2.6 to 3.3.
- Connect from 50% up to 160% capacity indoor units.
- Industry leading total piping length up to 1000m and a maximum pipe run of 160m.

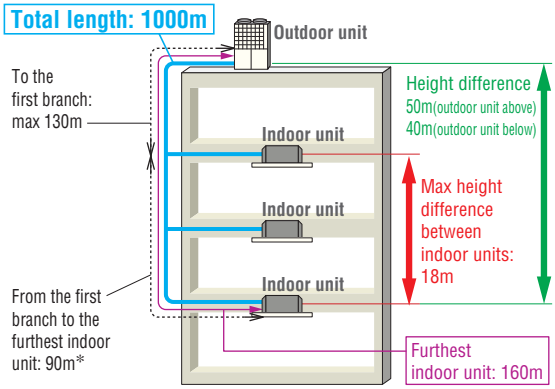


* The difference between the longest and the shortest indoor unit piping from the first branch must be within 40m.

**Range of operation**

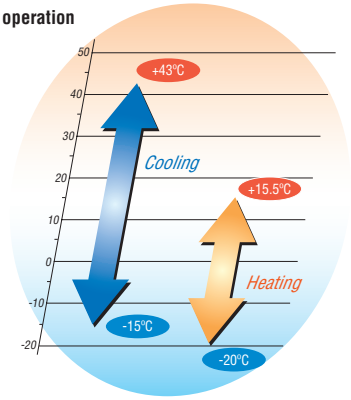


## Specifications

| Item | | | Model | FDC504KXRE6 | FDC560KXRE6 | FDC615KXRE6 | FDC680KXRE6 |
|---|---|---|---|---|---|---|---|
| Nominal horse power | | | | 18HP | 20HP | 22HP | 24HP |
| Power source | | | | 3 Phase 380-415V, 50Hz | | | |
| Starting current | | | A | 8 | | | |
| Max current | | | A | 47 | | | |
| Nominal capacity | Cooling | | kW | 50.4 | 56.0 | 61.5 | 68.0 |
| | Heating | | | 56.5 | 63.0 | 69.0 | 73.0 |
| Electrical characteristics | Power consumption | Cooling | kW | 15.18 | 17.95 | 21.47 | 25.99 |
| | | Heating | | 15.12 | 16.79 | 19.11 | 19.69 |
| Exterior dimensions | HxWxD | | mm | 2048x1350x720 | | | |
| Net weight | | | kg | 380 | | 399 | |
| Refrigerant charge | R410A | | kg | 11.5 | | 11.5 | |
| Sound pressure level | Cooling/Heating | | dB(A) | 62/62 | 63.5/63.5 | 64/64.5 | 65.5/65.5 |
| Refrigerant piping size | Liquid line | | mm(in) | ø12.7(1/2") | | | |
| | Suction Gas line | | | ø28.58(1 1/8") | | | |
| | Discharge Gas line | | | ø22.22(7/8") | | ø25.4(1") [ø22.22(7/8")] | |
| Capacity connection | | | % | 50~160 | | | |
| Number of connectable indoor units | | | | 36 | 40 | 44 | 49 |

1. The data are measured under the following conditions(ISO-T1). Cooling: Indoor temp. of 27°CDB, 19°CWB, and outdoor temp. of 35°CDB. Heating: Indoor temp. of 20°CDB, and outdoor temp. of 7°CDB, 6°CWB. Piping length is 7.5m.
2. Sound pressure level indicates the value in an anechoic chamber. During operation these values are somewhat higher due to ambient conditions.
3. [ ] : Pipe sizes applicable to European installations are shown in parentheses.

# Dimensions

All measurements in mm.

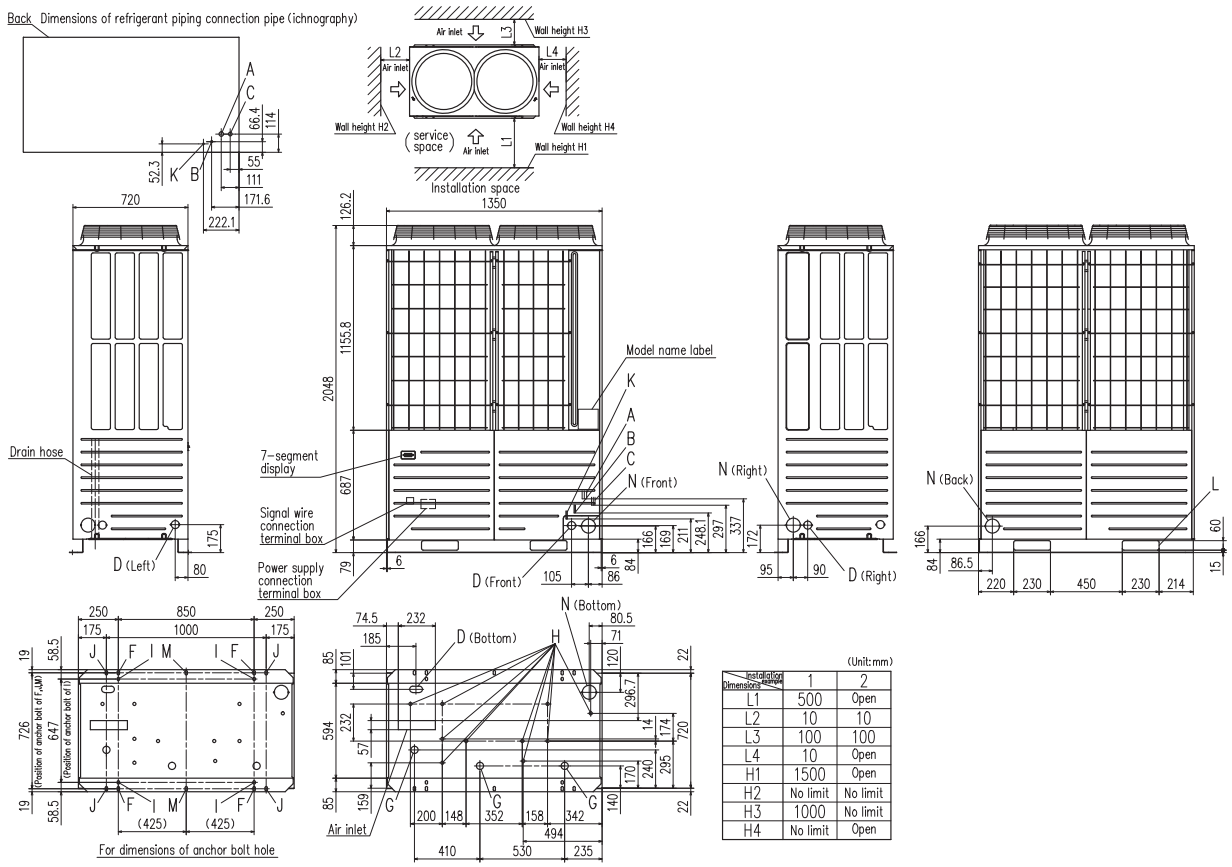


| Dimensions \ Installation example | 1 | 2 |
|---|---|---|
| L1 | 500 | Open |
| L2 | 10 | 10 |
| L3 | 100 | 100 |
| L4 | 10 | Open |
| H1 | 1500 | Open |
| H2 | No limit | No limit |
| H3 | 1000 | No limit |
| H4 | No limit | Open |

| Mark | Content | 504 | 560 | 560-K | 615 | 680 |
|---|---|---|---|---|---|---|
| A | Refrigerant suction gas piping connection entrance | ø28.58(Brazing) | | | | |
| B | Refrigerant liquid piping connection entrance | ø12.7(Flare) | | | | |
| C | Refrigerant discharge gas piping connection entrance | ø22.22(Brazing) | | | ø25.4(Brazing) | |
| D | Power supply entry hole | ø50(right · left · front),long hole 40x80(under side) | | | | |
| F | Anchor bolt hole | M10 x 4 places | | | | |
| G | Drain waste water hose hole | ø45 x 3 places | | | | |
| H | Drain hole | ø20 x 10 places | | | | |
| K | Refrigerant oil equalization piping connection pipe | ø9.52(Flare) | | | | |
| L | Carrying in or hole for hanging | 230x60 | | | | |
| N | Refrigerant piping exit hole | ø88(or ø100) | | | | |

| Installation example | | |
|---|---|---|
| Dimensions | 1 | 2 |
| $L_1$ | 500 | Open |
| $L_2$ | 10 | 10 |
| $L_3$ | 100 | 100 |
| $L_4$ | 10 | Open |
| $H_1$ | 1500 | Open |
| $H_2$ | No limit | No limit |
| $H_3$ | 1000 | No limit |
| $H_4$ | No limit | Open |

Notes:
(1) Make sure to secure the unit with anchor bolts.
(2) Make sure to allow the space of 2m or more above the unit.
(3) Connect the refrigerant piping (suction gas side, discharge gas side, liquid side) at local site.
(4) The refrigerant piping connection entrance and the power supply intake are of the half blank shape. Cut it with the nipper etc., when you use.
(5) Use ø88 (or ø100) for the refrigerant piping connection entrance.
(6) Please use the anchor hole (M10x10) marked I and J and M for a renewal purpose.
(7) Please connect the oil equalization pipe marked K with only the outdoor combination unit.
(8) Please use combination trestle (option) when you use the trestle by outdoor combination unit.

# Heat recovery 3-pipe combination systems 26, 28, 30, 32HP (73.5kW – 90.0kW) *for simultaneous heating and cooling*

| Model No. | Nominal Cooling Capacity |
|---|---|
| FDC735KXRE6 (FDC335-K+FDC400) | 73.5kW |
| FDC800KXRE6 (FDC400x2) | 80.0kW |
| FDC850KXRE6 (FDC400+FDC450) | 85.0kW |
| FDC900KXRE6 (FDC450x2) | 90.0kW |

Uniform footprint of all models (from 8HP~24HP) allows continuous side-by-side installation

- Heat recovery systems offer high performance VRF for almost every type of building, with the capacity for simultaneous heating and cooling operations of individual indoor units. Energy efficiency is maximised by employing DC inverter compressors ONLY, and distributing surplus heat from cooling operations to areas where it is required (and vice versa) resulting in COP (in cooling) from 3.3 to 3.5.
- Connect from 50% up to 160% capacity indoor units.
- Industry leading total piping length up to 1000m and a maximum pipe run of 160m.

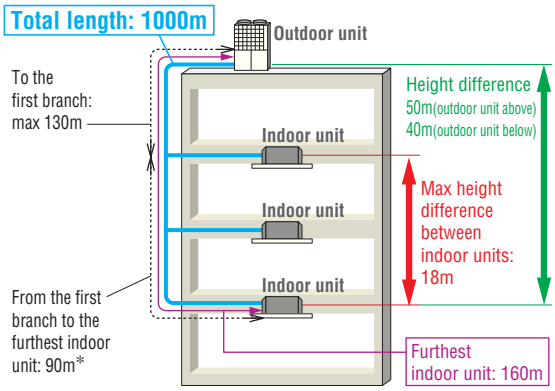


* The difference between the longest and the shortest indoor unit piping from the first branch must be within 40m.

**Range of operation**

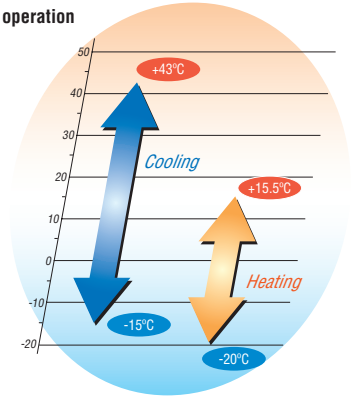


## Specifications

| Item | | | Model | FDC735KXRE6 | FDC800KXRE6 | FDC850KXRE6 | FDC900KXRE6 |
|---|---|---|---|---|---|---|---|
| Combination (FDC) | | | | 335KXRE6-K | 400KXRE6 | 400KXRE6 | 450KXRE6 |
| | | | | 400KXRE6 | 400KXRE6 | 450KXRE6 | 450KXRE6 |
| Nominal horse power | | | | 26HP | 28HP | 30HP | 32HP |
| Power source | | | | 3 Phase 380-415V, 50Hz | | | |
| Starting current | | | A | 16 | | | |
| Max current | | | A | 94 | | | |
| Nominal capacity | Cooling | | kW | 73.5 | 80.0 | 85.0 | 90.0 |
| | Heating | | | 82.5 | 90.0 | 95.0 | 100.0 |
| Electrical characteristics | Power consumption | Cooling | kW | 21.08 | 23.22 | 25.10 | 26.98 |
| | | Heating | | 21.3 | 23.86 | 25.25 | 26.64 |
| Exterior dimensions | HxWxD | | mm | 1690x2700x720 | | | |
| Net weight | | | kg | 358x2 | | | |
| Refrigerant charge | R410A | | kg | 11.5x2 | | | |
| Refrigerant piping size | Liquid line | | mm(in) | ø15.88(5/8") | | | |
| | Suction Gas line | | | ø31.75(1 1/4")[ø34.92(1 3/8")] | | | |
| | Discharge Gas line | | | ø25.4(1")[ø28.58(1 1/8")] | ø28.58(1 1/8") | | |
| Capacity connection | | | % | 50~160 | | | |
| Number of connectable indoor units | | | | 53 | 58 | 61 | 65 |

1. The data are measured under the following conditions(ISO-T1). Cooling: Indoor temp. of 27°CDB, 19°CWB, and outdoor temp. of 35°CDB. Heating: Indoor temp. of 20°CDB, and outdoor temp. of 7°CDB, 6°CWB. Piping length is 7.5m.
2. Sound pressure level indicates the value in an anechoic chamber. During operation these values are somewhat higher due to ambient conditions.
3. [ ] : Pipe sizes applicable to European installations are shown in parentheses.

# Dimensions

All measurements in mm.

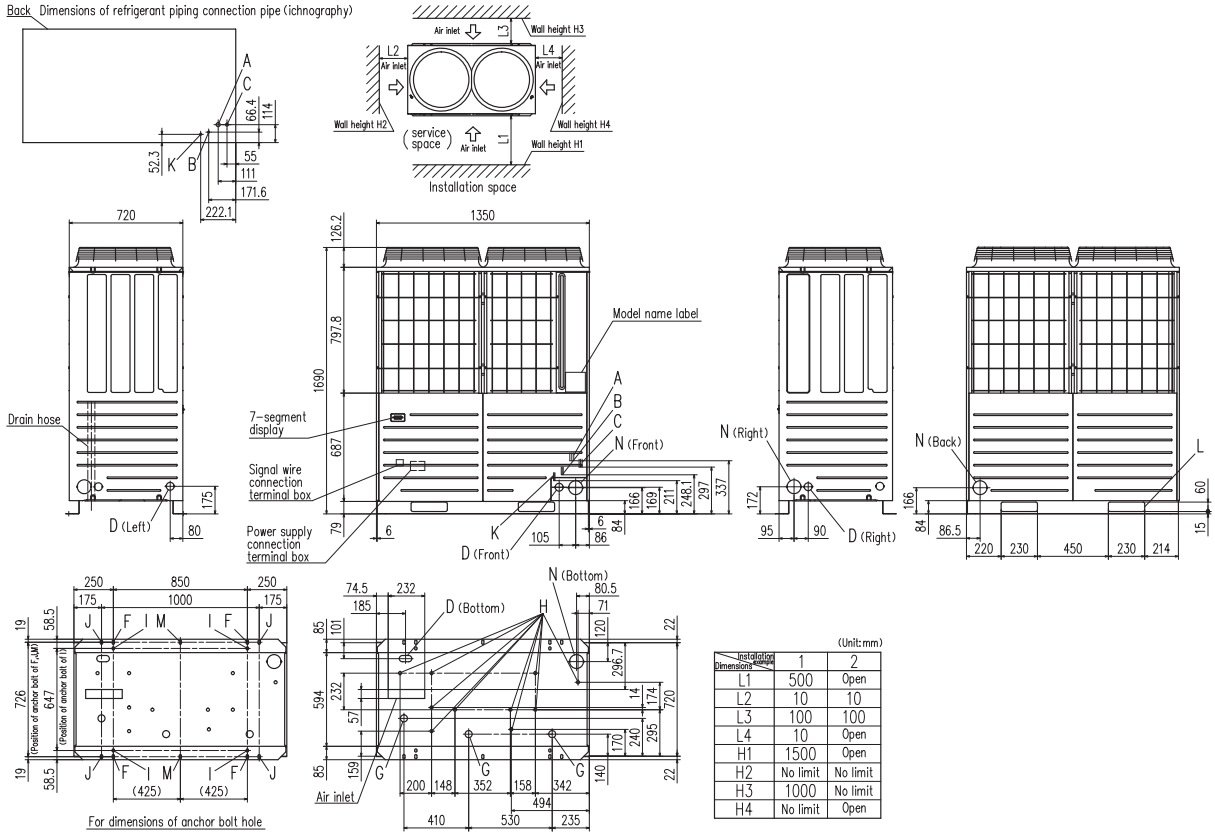


(Unit: mm)

| Installation / Dimensions | 1 | 2 |
|---|---|---|
| L1 | 500 | Open |
| L2 | 10 | 10 |
| L3 | 100 | 100 |
| L4 | 10 | Open |
| H1 | 1500 | Open |
| H2 | No limit | No limit |
| H3 | 1000 | No limit |
| H4 | No limit | Open |

| Mark | Content | 335-K | 400 | 450 |
|---|---|---|---|---|
| A | Refrigerant suction gas piping connection entrance | ø25.4(Brazing) | | ø28.58(Brazing) |
| B | Refrigerant liquid piping connection entrance | ø12.7(Flare) | | |
| C | Refrigerant discharge gas piping connection entrance | ø19.05(Brazing) | ø22.22(Brazing) | |
| D | Power supply entry hole | ø50(right · left · front),long hole 40x80(under side) | | |
| F | Anchor bolt hole | M10 x 4 places | | |
| G | Drain waste water hose hole | ø45 x 3 places | | |
| H | Drain hole | ø20 x 10 places | | |
| K* | Refrigerant oil equalization piping connection entrance | ø9.52(Flare) | | |
| L | Carrying in or hole for hanging | 230x60 | | |
| N | Refrigerant piping exit hole | ø88(or ø100) | | |

*14,16HP models only

| Installation example | | |
|---|---|---|
| Dimensions | 1 | 2 |
| $L_1$ | 500 | Open |
| $L_2$ | 10 | 10 |
| $L_3$ | 100 | 100 |
| $L_4$ | 10 | Open |
| $H_1$ | 1500 | Open |
| $H_2$ | No limit | No limit |
| $H_3$ | 1000 | No limit |
| $H_4$ | No limit | Open |

Notes:
(1) Make sure to secure the unit with anchor bolts.
(2) Make sure to allow the space of 2m or more above the unit.
(3) Connect the refrigerant piping (suction gas side, discharge gas side, liquid side) at local site.
(4) The refrigerant piping connection entrance and the power supply intake are of the half blank shape. Cut it with the nipper etc., when you use.
(5) Use ø88 (or ø100) for the refrigerant piping connection entrance.
(6) Please use the anchor hole (M10x10) marked I and J and M for a renewal purpose.
(7) Please connect the oil equalization pipe marked K with only the outdoor combination unit. (for 14,16HP only)
(8) Please use combination trestle (option) when you use the trestle by outdoor combination unit. (for 14,16HP only)

# Heat recovery 3-pipe combination systems
# 34, 36, 38, 40, 42, 44, 46, 48HP (96.0kW – 136.0kW)

*for simultaneous heating and cooling*

| Model No. | Nominal Cooling Capacity |
|---|---|
| FDC960KXRE6 (FDC450+FDC504) | 96.0kW |
| FDC1010KXRE6 (FDC504x2) | 101.0kW |
| FDC1065KXRE6 (FDC504+FDC560) | 106.5kW |
| FDC1130KXRE6 (FDC560x2) | 113.0kW |
| FDC1180KXRE6 (FDC560-K+FDC615) | 118.0kW |
| FDC1235KXRE6 (FDC615x2) | 123.5kW |
| FDC1300KXRE6 (FDC615+FDC680) | 130.0kW |
| FDC1360KXRE6 (FDC680x2) | 136.0kW |

- Heat recovery systems offer high performance VRF for almost every type of building, with the capacity for simultaneous heating and cooling operations of individual indoor units. Energy efficiency is maximised by employing DC inverter compressors ONLY, and distributing surplus heat from cooling operations to areas where it is required (and vice versa) resulting in COP (in cooling) from 3.3 to 3.8.
- Connect from 50% up to 130% capacity indoor units (960KXRE6:160%).
- Industry leading total piping length up to 1000m and a maximum pipe run of 160m.

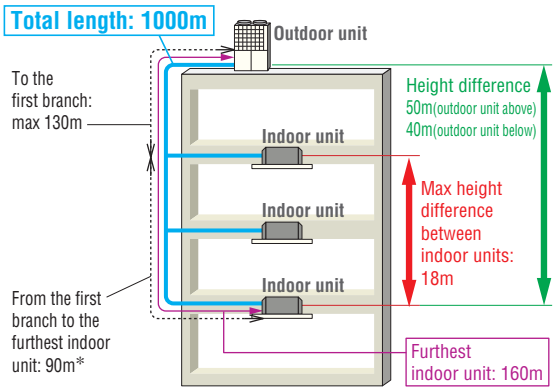


* The difference between the longest and the shortest indoor unit piping from the first branch must be within 40m.

**Range of operation**

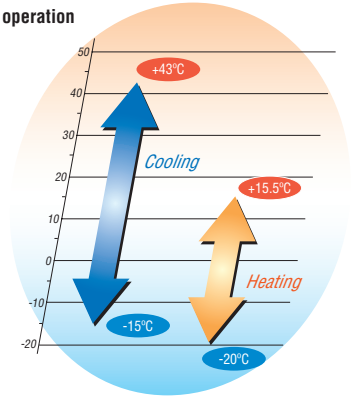


# Specifications

*Exterior dimension : Please refor to page 45.

| Item | | | Model | FDC960KXRE6 | FDC1010KXRE6 | FDC1065KXRE6 | FDC1130KXRE6 | FDC1180KXRE6 | FDC1235KXRE6 | FDC1300KXE6 | FDC1360KXRE6 |
|---|---|---|---|---|---|---|---|---|---|---|---|
| Combination (FDC) | | | | 450KXRE6 * | 504KXRE6 | 504KXRE6 | 560KXRE6 | 560KXRE6-K | 615KXRE6 | 615KXRE6 | 680KXRE6 |
| | | | | 504KXRE6 | 504KXRE6 | 560KXRE6 | 560KXRE6 | 615KXRE6 | 615KXRE6 | 680KXRE6 | 680KXRE6 |
| Nominal horse power | | | | 34HP | 36HP | 38HP | 40HP | 42HP | 44HP | 46HP | 48HP |
| Power source | | | | 3 Phase 380-415V, 50Hz | | | | | | | |
| Starting current | | | A | 16 | | | | | | | |
| Max current | | | A | 94 | | | | | | | |
| Nominal capacity | Cooling | | kW | 96.0 | 101.0 | 106.5 | 113.0 | 118.0 | 123.5 | 130.0 | 136.0 |
| | Heating | | | 108.0 | 113.0 | 119.5 | 127.0 | 132.0 | 138.0 | 142.0 | 146.0 |
| Electrical characteristics | Power consumption | Cooling | kW | 28.67 | 30.36 | 33.13 | 35.9 | 39.42 | 42.94 | 47.46 | 51.98 |
| | | Heating | | 28.44 | 30.24 | 31.91 | 33.58 | 35.9 | 38.22 | 38.80 | 39.38 |
| Exterior dimensions | HxWxD | | mm | 2048x2700x720 | | | | | | | |
| Net weight | | | kg | 358+380 | 380x2 | | | 399x2 | | | |
| Refrigerant charge | R410A | | kg | 11.5x2 | | | | | | | |
| Refrigerant piping size | Liquid line | | mm(in) | ø15.88(5/8") | | ø19.05(3/4") | | | | | |
| | Suction Gas line | | | ø31.75(1 1/4")[ø34.92(1 3/8")] | ø38.1(1 1/2")[ø34.92(1 3/8")] | | | | | | |
| | Discharge Gas line | | | ø28.58(1 1/8") | | | | | | | |
| Capacity connection | | | % | 50~160 | 50~130 | | | | | | |
| Number of connectable indoor units | | | | 69 | 59 | 62 | 66 | 69 | 72 | 76 | 80 |

1. The data are measured under the following conditions(ISO-T1). Cooling: Indoor temp. of 27°CDB, 19°CWB, and outdoor temp. of 35°CDB. Heating: Indoor temp. of 20°CDB, and outdoor temp. of 7°CDB, 6°CWB. Piping length is 7.5m.
2. Sound pressure level indicates the value in an anechoic chamber. During operation these values are somewhat higher due to ambient conditions.
3. [ ] : Pipe sizes applicable to European installations are shown in parentheses.

# Dimensions

All measurements in mm.

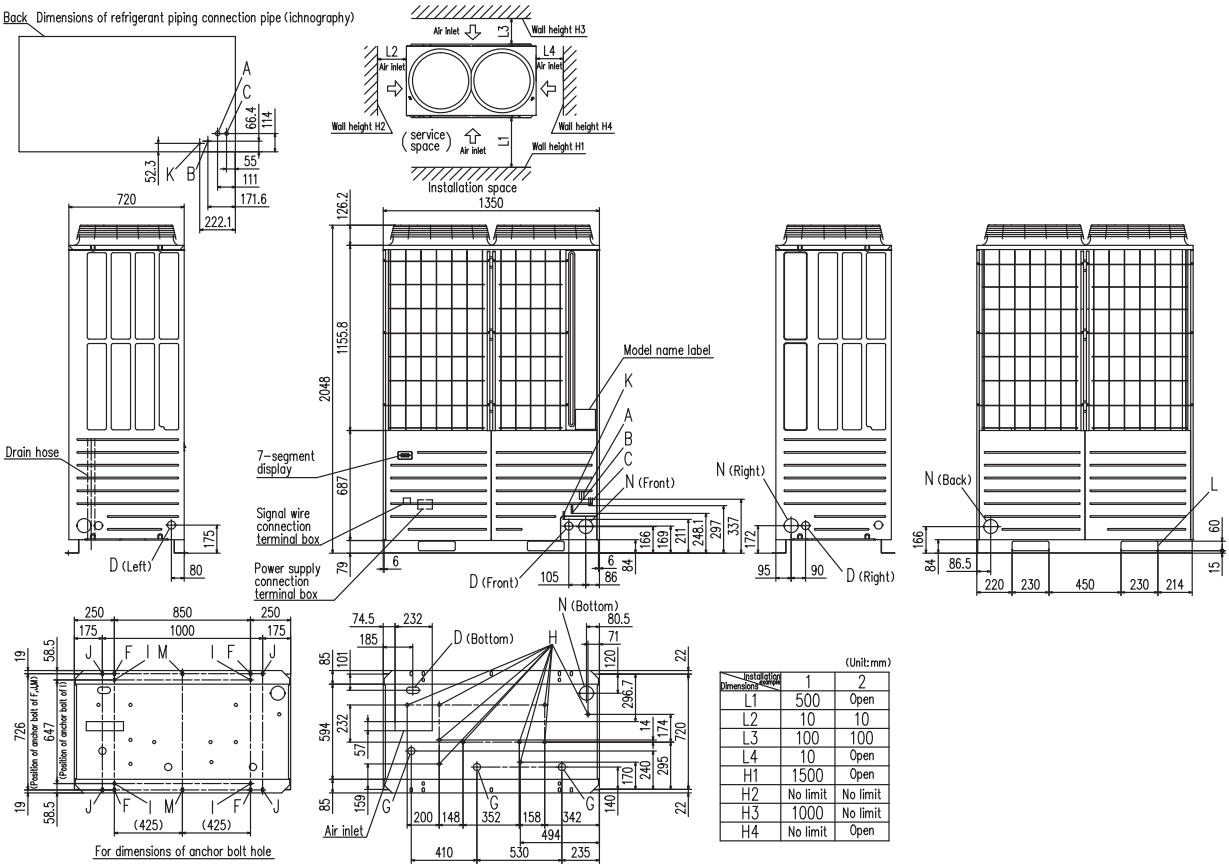


| Dimensions \ Installation example | 1 | 2 |
|---|---|---|
| L1 | 500 | Open |
| L2 | 10 | 10 |
| L3 | 100 | 100 |
| L4 | 10 | Open |
| H1 | 1500 | Open |
| H2 | No limit | No limit |
| H3 | 1000 | No limit |
| H4 | No limit | Open |

| Mark | Content | 504 | 560 | 560-K | 615 | 680 |
|---|---|---|---|---|---|---|
| A | Refrigerant suction gas piping connection entrance | ø28.58(Brazing) | | | | |
| B | Refrigerant liquid piping connection entrance | ø12.7(Flare) | | | | |
| C | Refrigerant discharge gas piping connection entrance | ø22.22(Brazing) | | | ø25.4(Brazing) | |
| D | Power supply entry hole | ø50(right · left · front),long hole 40x80(under side) | | | | |
| F | Anchor bolt hole | M10 x 4 places | | | | |
| G | Drain waste water hose hole | ø45 x 3 places | | | | |
| H | Drain hole | ø20 x 10 places | | | | |
| K | Refrigerant oil equalization piping connection pipe | ø9.52(Flare) | | | | |
| L | Carrying in or hole for hanging | 230x60 | | | | |
| N | Refrigerant piping exit hole | ø88(or ø100) | | | | |

| Installation example | | |
|---|---|---|
| Dimensions | 1 | 2 |
| $L_1$ | 500 | Open |
| $L_2$ | 10 | 10 |
| $L_3$ | 100 | 100 |
| $L_4$ | 10 | Open |
| $H_1$ | 1500 | Open |
| $H_2$ | No limit | No limit |
| $H_3$ | 1000 | No limit |
| $H_4$ | No limit | Open |

Notes:
(1) Make sure to secure the unit with anchor bolts.
(2) Make sure to allow the space of 2m or more above the unit.
(3) Connect the refrigerant piping (suction gas side, discharge gas side, liquid side) at local site.
(4) The refrigerant piping connection entrance and the power supply intake are of the half blank shape. Cut it with the nipper etc., when you use.
(5) Use ø88 (or ø100) for the refrigerant piping connection entrance.
(6) Please use the anchor hole (M10x10) marked I and J and M for a renewal purpose.
(7) Please connect the oil equalization pipe marked K with only the outdoor combination unit.
(8) Please use combination trestle (option) when you use the trestle by outdoor combination unit.

# PFD refrigerant flow branch control

**Relay kit**
**(Relay kit comes attached to the branch control)**

| Branch control | Total downstream indoor unit capacity |
|---|---|
| PFD1123-E | less than 11.2kW |
| PFD1803-E | less than 18.0kW |
| PFD2803-E | 28.0kW or less |
| PFD1123X4-E | less than 44.8kW(less than 11.2kWx4 branches) |

- The remote control setting (as individual indoor unit on-off, temperature setting other than cooling/heating mode control) is possible with one remote control connected to each indoor unit, while at the same time, Center Control (SC-SL1N/2NA/4-AE) can be used together with the individual remote control.
- It is necessary to set the central control to use this function. Please refer to the Installation Manual for details.

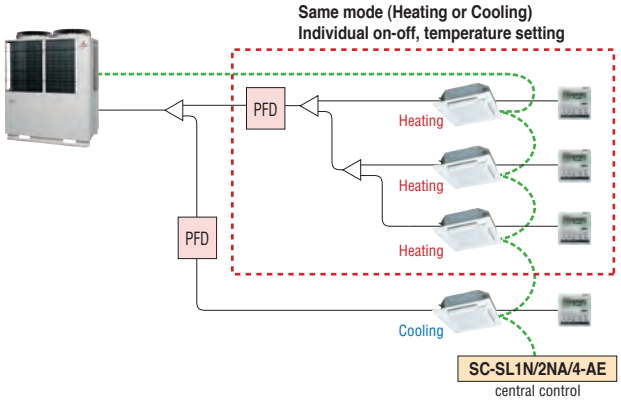


- In case of the mode changeover from cooling to heating and from cooling to heating, by the use of only the indoor units and PFD box combination, the mode changeover sound was reduced. All this made possible without turning off the compressor and at the same time without the reduction of capacity.
- The risk of refrigerant leakage was reduced by changing piping connection at the PFD box to brazing method.
- By the use of optional PFD box extension cable that has a connector at ends, makes it possible to further separate the indoor unit and PFD box. This will enable the PFD box to be located away from the indoor unit and help reduce the influence of sound caused by PFD box and refrigerant flow.

**extension cable 15m**

**PFD-15WR-E (option)**

**Easy installation**
New PFD design means the connection of the indoor unit liquid pipe is made directly to the liquid line - bypassing the PFD. This means (x2) less pipe connections per indoor unit, reducing installation time and cost.

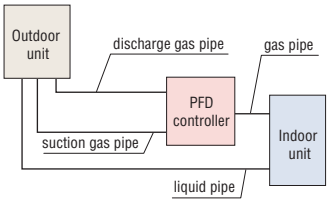


The PFD is connected to the indoor unit by 3 core signal wire via a relay kit (supplied) to be located within 2m of each other. The indoor unit however can be up to 40m away. Power to the PFD can be connected from the indoor unit or other supply.

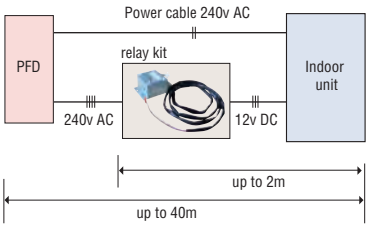


Groups of indoor units can be connected up to a total capacity 44.8kW to a single PFD with branch piping and all units in that group will operate in the same mode only (cooling or heating).

We also have introduced the 4-way PFD control PFD1123X4-E which can connect up to four indoor units with individual control - simultaneous cooling or heating.

| Branch control | Total downstream capacity | *Connectable indoor units |
|---|---|---|
| PFD1123-E | less than 11.2kW | 1-5 |
| PFD1803-E | less than 18.0kW | 1-8 |
| PFD2803-E | 28.0kW or less | 1-10 |
| PFD1123X4-E | less than 44.8kW(less than 11.2kWx4 branches) | Up to 20 |

*Refer to Data Book for details

**4-Way PFD box**

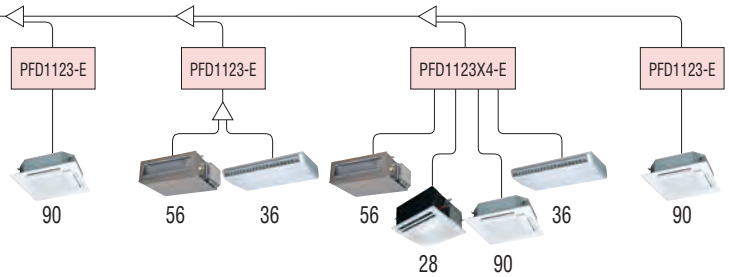

# Dimensions

All measurements in mm.

## PFD1123-E

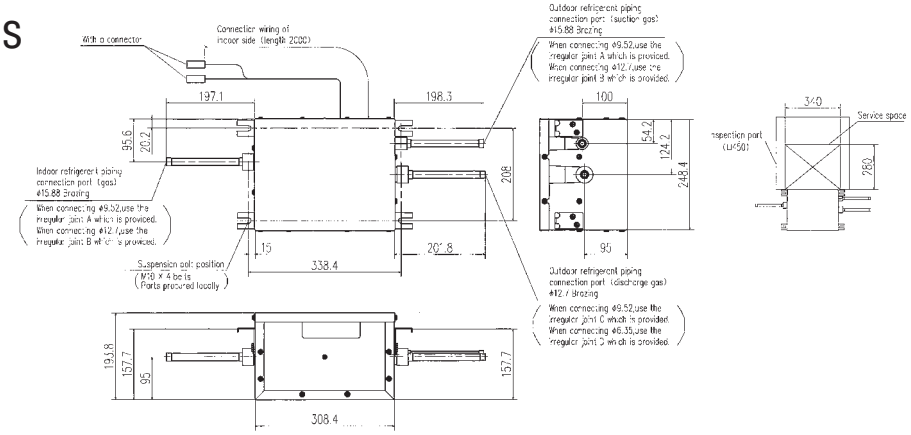


## PFD1803-E

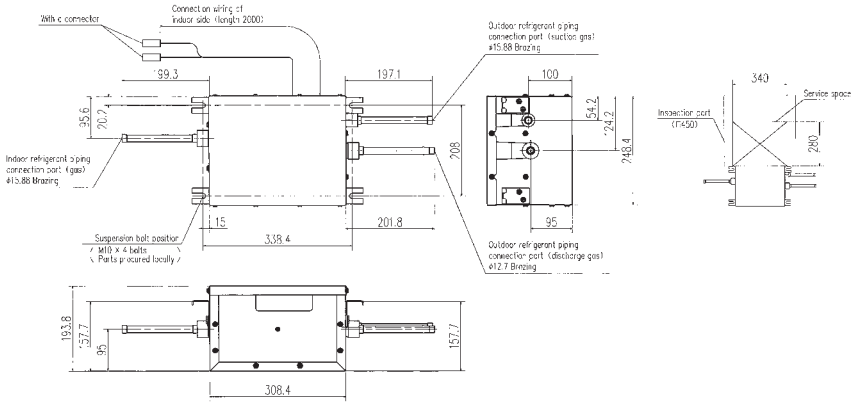


## PFD2803-E

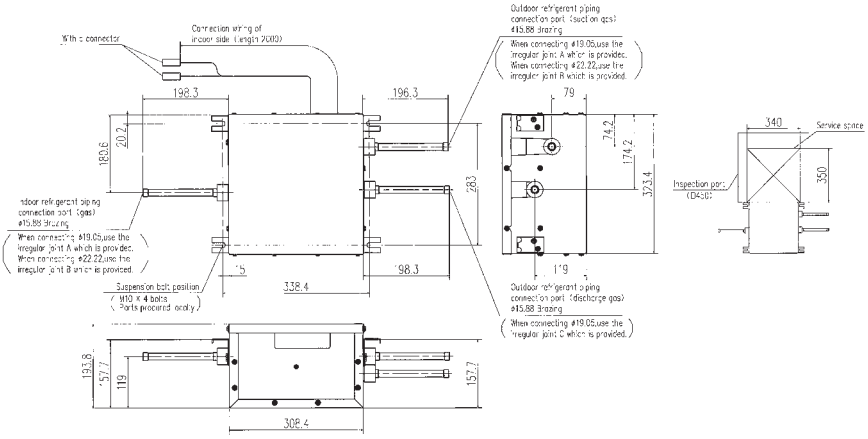


## PFD1123X4-E

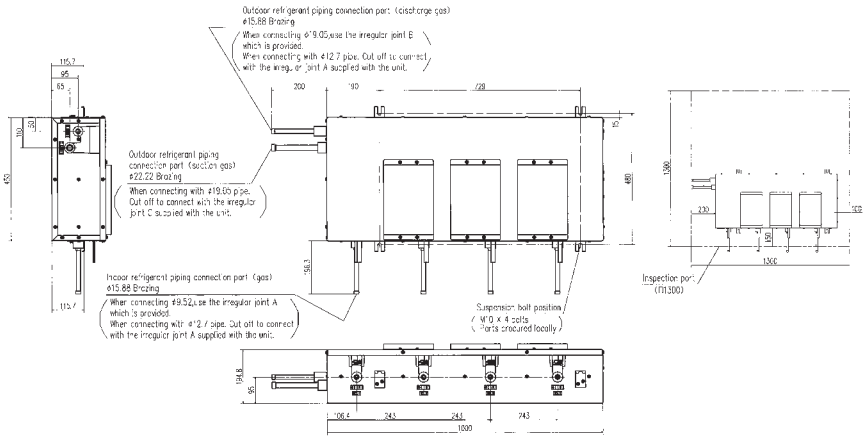

# Refrigerant piping

**Installation of Interconnecting Pipework**
Mitsubishi KXZ/KX6 equipment is manufactured to the highest standards of quality and reliability. It is imperative the method of installation and the materials used are also to high standards, to ensure trouble free operation and long term reliability.
The interconnecting pipework must be installed by a competent and trained engineer.
Refrigeration quality copper tube must be used, soft copper coils or half-hard straight lengths.
The refrigeration quality tube must be soft drawn seamless high grade copper pipe. The copper tube must be selected taking into account the higher operating pressures of R410A refrigerant, and that high pressures will occur throughout the system because of the reverse cycle operation. All pipework material used should be EN12735 European standard.
The supplied branch pipe kits, must be used to make connections to indoor units, and the supplied manifold kits must be used to make connections between outdoor units (where applicable); it is not permitted to use standard fittings such as elbows, tees etc. The branch pipes shall be installed in accordance with the manufacturer's instructions, allowing unrestricted flow of refrigerant, and in accordance with European standard E378.
All brazed joints shall be made with dry nitrogen purge to ensure the prevention of oxidisation to the internal surface of the copper pipes.
The ingress of moisture, dirt and any other contaminants to the interior of the copper pipes, and air conditioning units, must be prevented during the installation procedure.
After the installation of pipework, prior to the connection of the outdoor units, and sealing of insulation joints, the pipework must be pressure tested for leakage, using dry nitrogen.

**Additional Refrigerant**
Additional R410A refrigerant only shall be used, and must be charged by weight only, using electronic scales. The amount of additional refrigerant must be accurately calculated from the manufacturer's data, based on the length and diameter of each section of the liquid refrigerant pipework of the system.

The products contains fluorinated greenhouse gases covered by Kyoto protocol.

## Single outdoor unit piping examples:

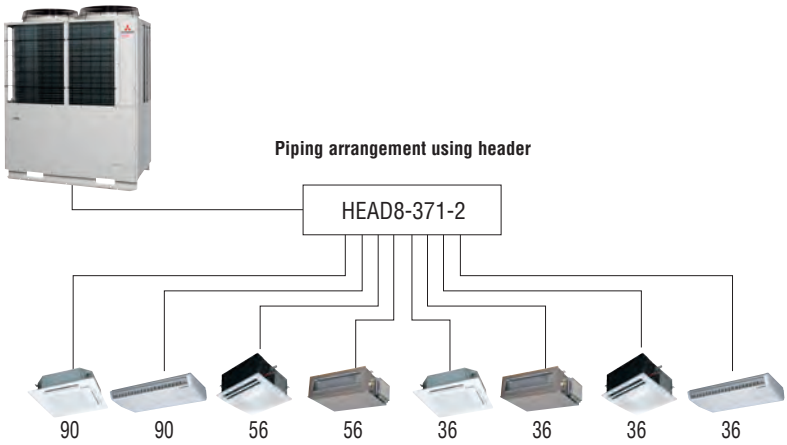

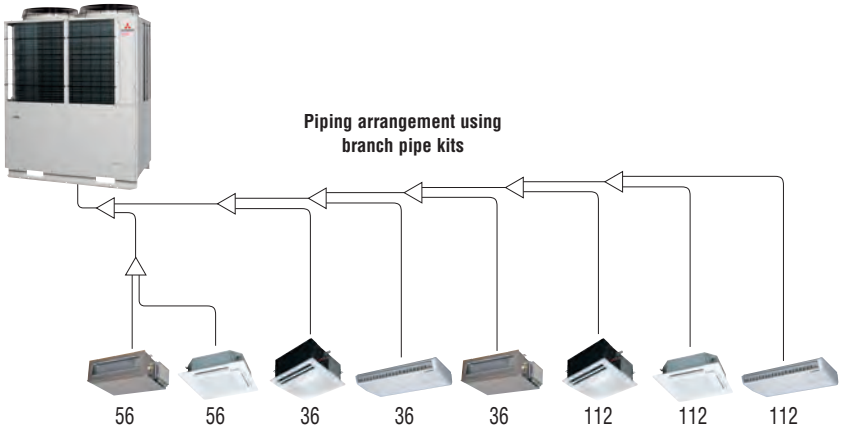

**Main (Outdoor unit side branching pipe – Indoor unit side first branching pipe)**
If the longest distance (measured between the outdoor unit and the farthest indoor unit) is 90m or longer (actual length), please change the main pipe size according to the table below.

| Outdoor unit | Main pipe size (normal) | | Pipe size for an actual length of 90m or longer | |
|---|---|---|---|---|
| | Gas pipe | Liquid pipe | Gas pipe | Liquid pipe |
| 280 | ø22.22 × t 1.0 | ø9.52 × t 0.8 | ø25.4 (ø22.22) × t 1.0 | ø12.7 × t 0.8 |
| 335 | ø25.4 (ø22.22) × t 1.0 | ø12.7 × t 0.8 | | |
| 400 | ø25.4 (ø28.58) × t 1.0 | | ø28.58 × t 1.0 | |
| 450 | ø28.58 × t 1.0 | | ø31.8 × t 1.1 (ø28.58 × t 1.0) | ø15.88 × t 1.0 |
| 475 | | | | |
| 500 | | | | |
| 560 | | | | |
| 615 | | | | |
| 670 | | | | |
| 735 | ø31.8 × t 1.1 (ø34.92 × t 1.2) | ø15.88 × t 1.0 | ø38.1 × t 1.35 (ø34.92 × t 1.2) | ø19.05 × t 1.0 |
| 800 | | | | |
| 850 | | | | |
| 900 | | | | |
| 950 | | | | |
| 1000 | ø38.1 × t 1.35 (ø34.92 × t 1.2) | ø19.05 × t 1.0 | | ø22.22 × t 1.0 |
| 1060 | | | | |
| 1120 | | | | |
| 1200 | | | | |
| 1250 | | | | |
| 1300 | | | | |
| 1350 | | | | |
| 1425 | | | | |
| 1450 | | | | |
| 1500 | | | | |
| 1560 | | | | |
| 1620 | | | | |
| 1680 | | | | |

| mm | inch |
|---|---|
| ø9.52 | 3/8" |
| ø12.7 | 1/2" |
| ø15.88 | 5/8" |
| ø19.05 | 3/4" |
| ø22.22 | 7/8" |
| ø25.4 | 1" |

| mm | inch |
|---|---|
| ø28.58 | 1 1/8" |
| ø31.8 | 1 1/4" |
| ø34.92 | 1 3/8" |
| ø38.1 | 1 1/2" |
| ø44.5 | 1 3/4" |
| ø50.8 | 2" |

Please use C1220T-1/2H for ø19.05 or larger pipes.
Pipe sizes applicable to European installations are shown in parentheses.

Branch pipes

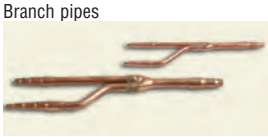

**DIS-22-1G/DIS-180-1G**

**DIS-371-1G/DIS-540-3**

Header pipe

**HEAD6-180-1G**

Combination outdoor unit manifold

**DOS-2A-3**
**DOS-3A-3**

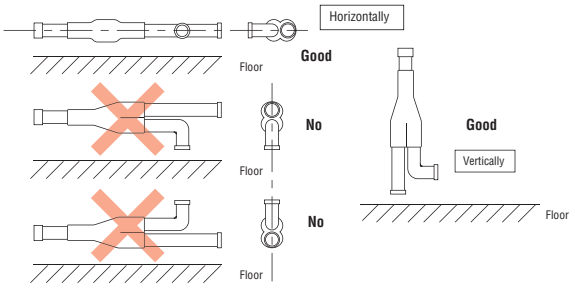


# Combination outdoor unit piping examples:

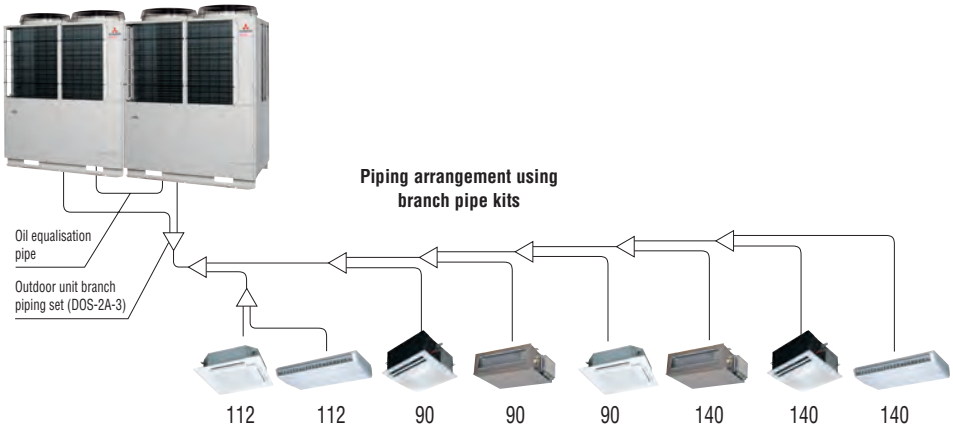


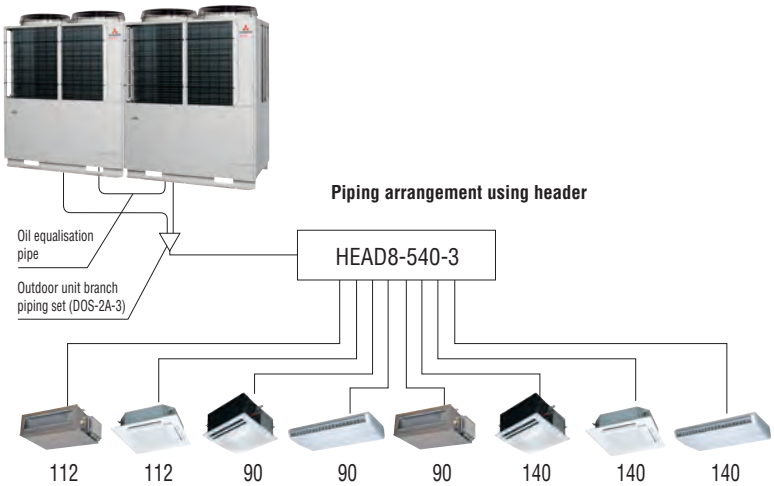


Outdoor unit's branch piping set

| Outdoor unit | Branch piping set |
|---|---|
| For two units (for 615~1120) | DOS-2A-3 |
| For three units (for 1200~1680) | DOS-3A-3 |

Indoor unit's first branch piping set

| Total capacity of indoor units | Branch piping set | Header set | |
|---|---|---|---|
| | | Model | Branches |
| ~179 | DIS-22-1G | HEAD4-22-1G | Max 4 branches |
| 180~370 | DIS-180-1G | HEAD6-180-1G | Max 6 branches |
| 371~539 | DIS-371-1G | HEAD8-371-2 | Max 8 branches |
| 540~ | DIS-540-3 | HEAD8-540-3 | Max 8 branches |

### Heat recovery systems

| Outdoor unit (HP) | | 8 | 10 | 12 | 14 | 16 | 18 | 20 | 22 | 24 | 26 | 28 | 30 | 32 | 34 | 36 | 38 | 40 | 42 | 44 | 46 | 48 |
|---|---|---|---|---|---|---|---|---|---|---|---|---|---|---|---|---|---|---|---|---|---|---|
| Liquid pipe | Furthest indoor unit =<90m | ø9.52 | | ø12.7 | | | | | | | ø15.88 | | | | | | ø19.05 | | | | | |
| Suction Gas pipe | | ø19.05 | ø22.22 | | ø28.58 | | | | | | ø34.92 | | | | | | | | | | | |
| Discharge Gas Pipe | | ø15.88 | ø19.05 | | ø22.22 | | | | | | ø28.58 | | | | | | | | | | | |
| Liquid pipe | Furthest indoor unit >90m | | | ø12.7 | | | ø15.88 | | | | | ø19.05 | | | | | ø22.22 | | | | | |
| Suction Gas pipe | | | ø22.22 | | ø28.58 | | | | | | ø34.92 | | | | | | | | | | | |
| Discharge Gas Pipe | | ø15.88 | ø19.05 | | ø22.22 | | | | | | ø28.58 | | | | | | | | | | | |

| mm | inch | mm | inch |
|---|---|---|---|
| ø9.52 | 3/8" | ø28.58 | 1 1/8" |
| ø12.7 | 1/2" | ø31.8 | 1 1/4" |
| ø15.88 | 5/8" | ø34.92 | 1 3/8" |
| ø19.05 | 3/4" | ø38.1 | 1 1/2" |
| ø22.22 | 7/8" | ø44.5 | 1 3/4" |
| ø25.4 | 1" | ø50.8 | 2" |

Pipe sizes applicable to European installations.

DIS-22-1-RG/DIS-180-1-RG

DOS-2A-1-RG

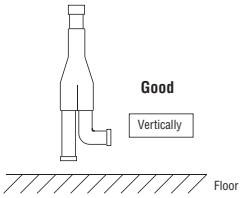


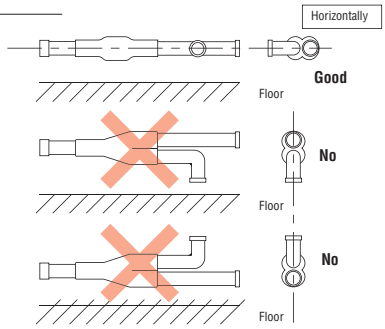


## Single outdoor unit piping examples:

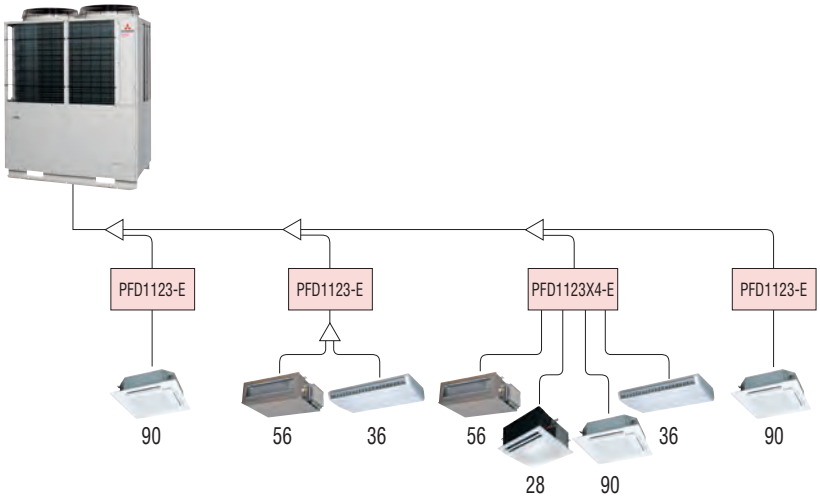


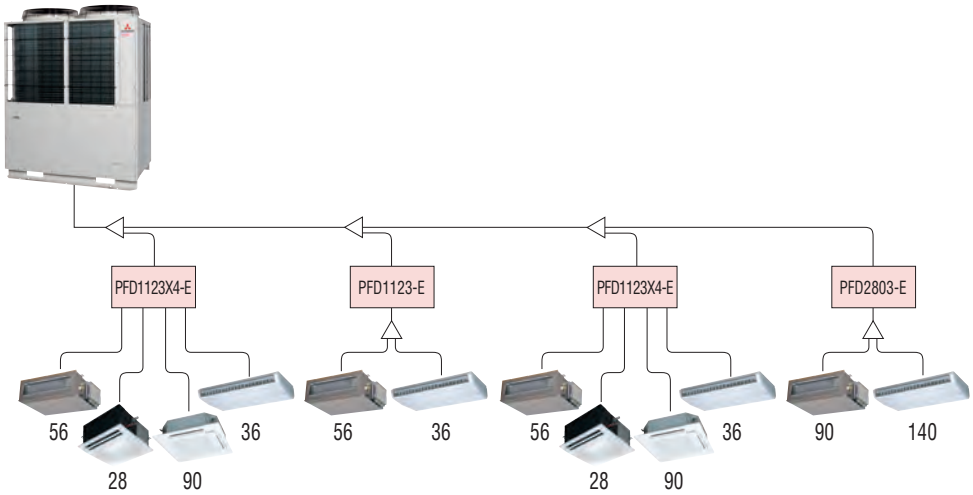

# Combination outdoor unit piping examples:

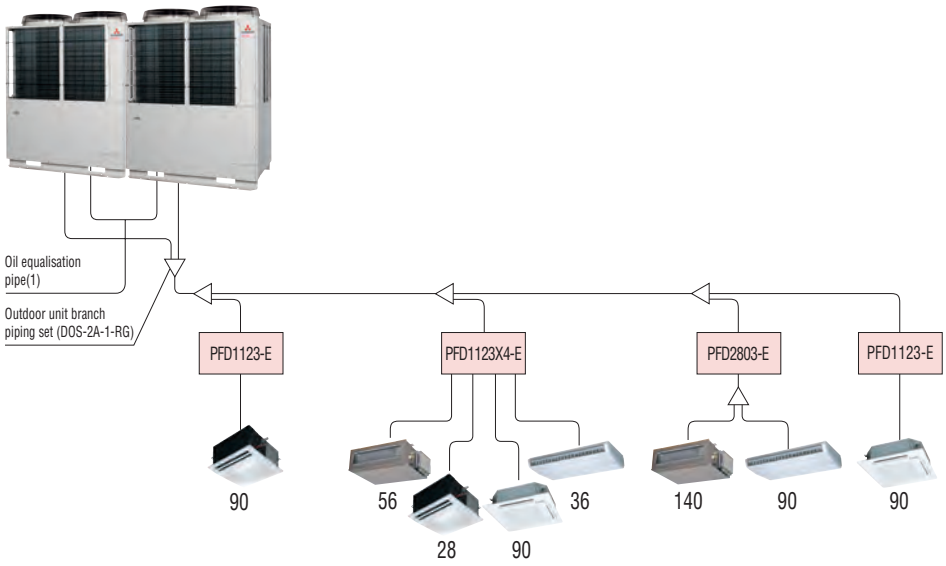


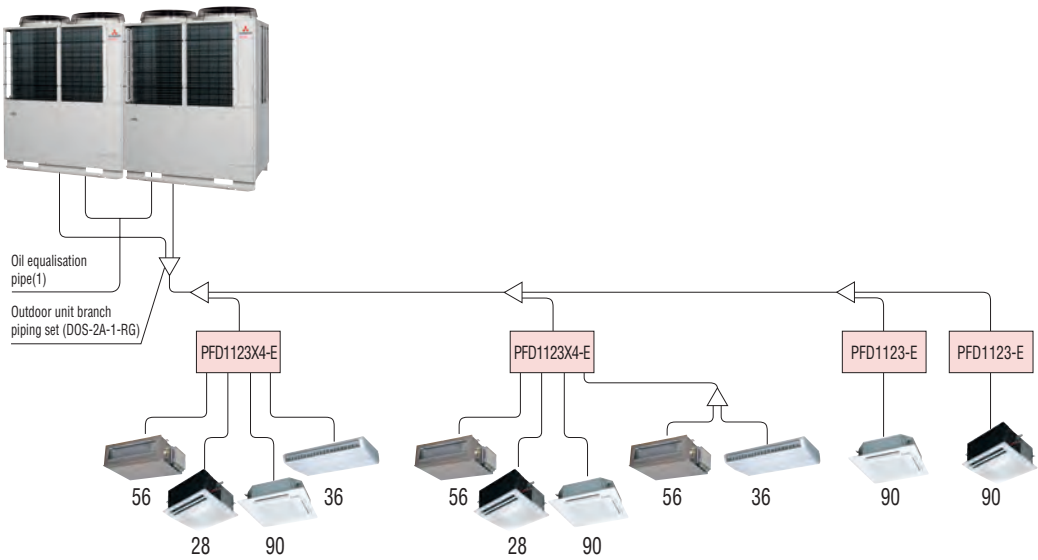


Outdoor unit's branch piping set

| Outdoor unit | Branch piping set |
|---|---|
| 2 units (for 735~1360) | DOS-2A-1-RG |

Indoor unit's first branch piping set

| Total capacity of indoor units | Branch piping set |
|---|---|
| ~179 | DIS-22-1-RG |
| 180~370 | DIS-180-1-RG |
| 371~539 | DIS-371-2-RG |
| 540~ | DIS-540-2-RG |

For Down Stream of PFD box

| Total capacity of indoor units | Branch piping set |
|---|---|
| ~179 | DIS-22-1G |
| 180~370 | DIS-180-1G |
| 371~539 | DIS-371-1G |

# Electrical wiring – power supply

KXZ/KX6 includes greatly simplified wiring requirements utilising a 'polarity-free' two wire control loop connecting the indoor units.

**Power wiring**

Cables can be laid through the front, right, left or bottom of the outdoor unit casing.
Separate power supplies should be used for the outdoor unit (3Phase) and the indoor units (1Phase).
Only control wiring is connected from outdoor to indoor unit.

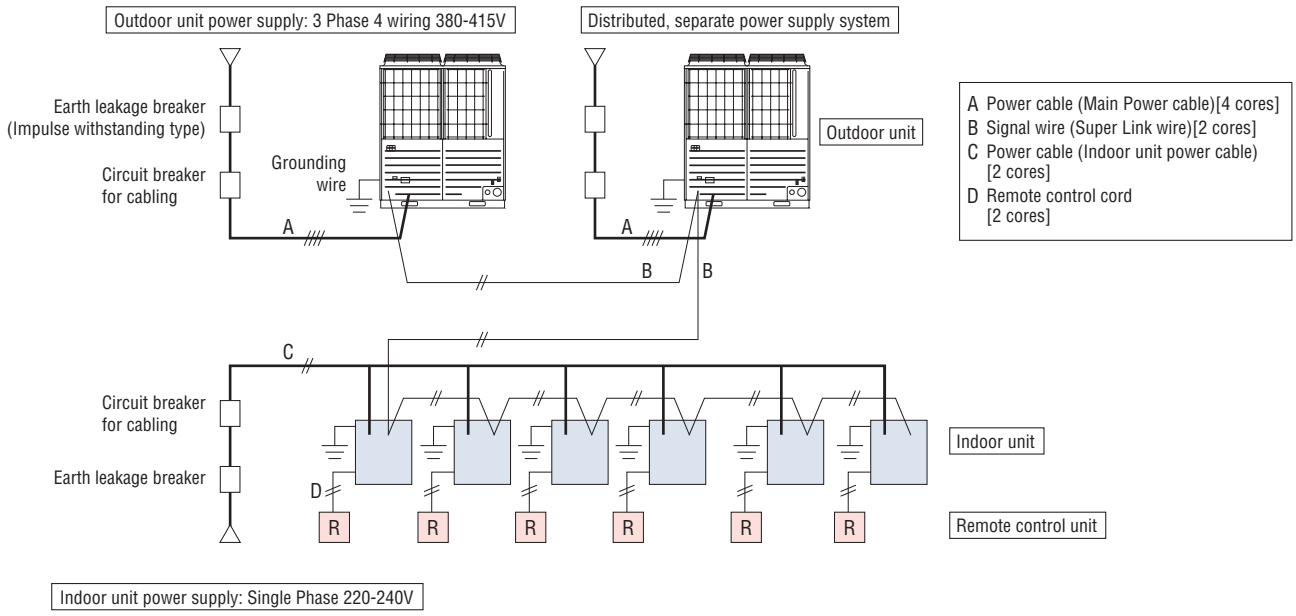


**CAUTION**

If the earth leakage breaker is exclusively for ground fault protection, then you will need to install a circuit breaker for wiring work.

Outdoor unit mechanical compartment

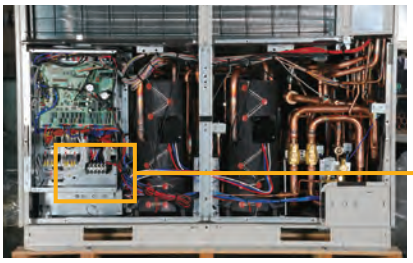

Electrical component box

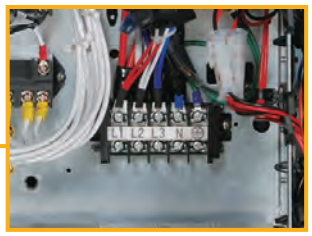

Outdoor unit power supply terminal block

# Electrical wiring – control wiring

1. The control wiring is 5 Volt DC, non-polarised, two wire connection notated as 'A1' and 'B1'. This 'AB' wiring connects outdoor unit to indoor unit and indoor unit to indoor unit.
2. This wiring must be a 2-core shielded cable size 0.75mm² or 1.25mm².

| | 0.75mm² | 1.25mm² |
|---|---|---|
| ~1000m | YES | YES |
| 1000~1500m | YES | NO |

3. We recommend the both ends of the shield of the cable are connected to ground (earth) at all the indoor units and outdoor units.
4. When plural outdoor units are used,
   - Connect the signal cable between indoor and outdoor units and the signal cable between outdoor units belonging to the same refrigerant line to A1 and B1.
   - Connect the signal line between outdoor units on different refrigerant lines to A2 and B2.
5. For current specification of 2-core (AB) wiring, please consult your MHI dealer.

(1) When one outdoor unit is used

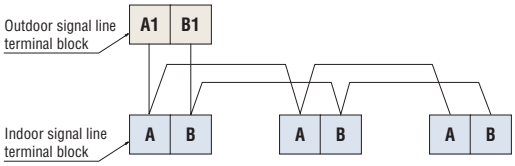


○ Indoor and outdoor signal lines do not have a polarity.
Any of the connections in the following illustration can be made.

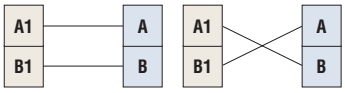


(2) When plural outdoor units are used

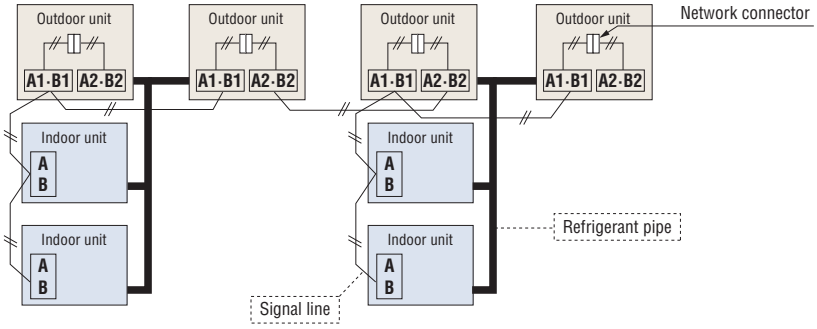


(a) The maximum number of indoor units that can be connected in a system is 128 and it is possible to configure outdoor units and/or indoor units as an outdoor or indoor unit group connected with each other with two wires.

(b) The signal wires can also be connected using the method shown below.

(3) The signal lines can also be connected using the method shown below.

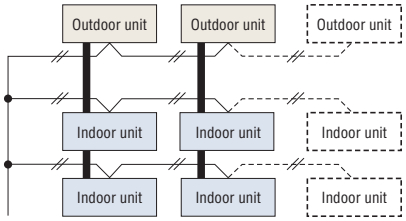


**Important** ○ Loop wiring prohibited

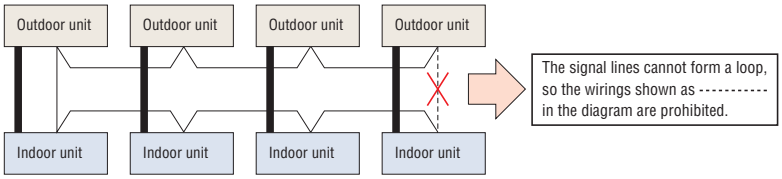


# Remote control wiring specifications

For interconnecting wiring between the remote control and indoor units (XY wiring) use 2-core cable size 0.3mm². The maximum length of 2-core cable is 600 metres. Where the 2-core wiring exceeds 100m, use the wire size detailed on the table below.

| Length (m) | Wire size |
|---|---|
| 100 to 200 | 0.5mm² x 2 core |
| To 300 | 0.75mm² x 2 core |
| To 400 | 1.25mm² x 2 core |
| To 600 | 2.0mm² x 2 core |

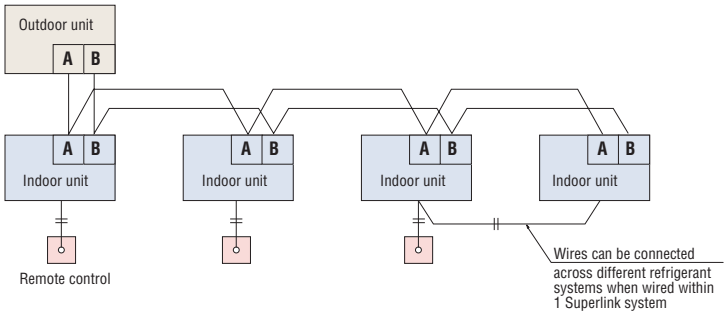

# Indoor units

## Ceiling Cassette -4way- FDT

**Model No.**

FDT28KXE6F
FDT36KXE6F
FDT45KXE6F
FDT56KXE6F
FDT71KXE6F
FDT90KXE6F
FDT112KXE6F
FDT140KXE6F
FDT160KXE6F

**Remote control (option)**

Wired

RC-EX1A RC-E5 RCH-E3

Wireless

RCN-T-36W-E

### Individual flap control system

According to room temperature conditions, four directions of air flow can be controlled by individual flap as preferred.
Individual flap control is available even after installation.

Due to optimization of outlet design of air flow with our new advanced technology, sufficient air flow is secured and long reach of air flow is realized.

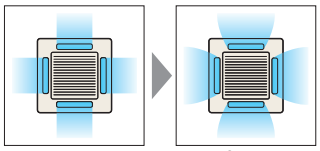


### The thinnest design

Thanks to new design of heat exchanger changed from 2 parts to 1 part, the height of indoor unit is reduced drastically.
Furthermore applying DC fan motors to FDT models, the highest energy efficiency level, reduction of weight and significant compact design are realized.

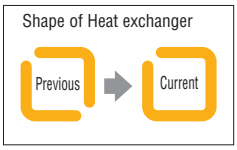


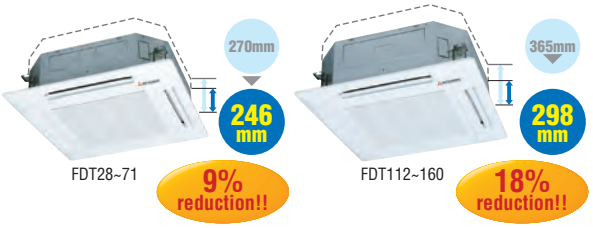


### Flap control system

Selection of flap position is possible. Individual flaps can be set at different angles.

*RCH-E3 is not applicable to the Individual flap control system and the flap control system.

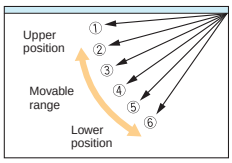

for person who is far from the indoor unit

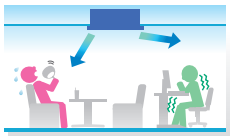

for both persons who are feeling hot or cold

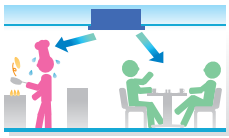

can cool both the kitchen and the guests

# Specifications

| Item | | Model | FDT28KXE6F | FDT36KXE6F | FDT45KXE6F | FDT56KXE6F | FDT71KXE6F | FDT90KXE6F | FDT112KXE6F | FDT140KXE6F | FDT160KXE6F |
|---|---|---|---|---|---|---|---|---|---|---|---|
| Nominal cooling capacity | | kW | 2.8 | 3.6 | 4.5 | 5.6 | 7.1 | 9.0 | 11.2 | 14.0 | 16.0 |
| Nominal heating capacity | | kW | 3.2 | 4.0 | 5.0 | 6.3 | 8.0 | 10.0 | 12.5 | 16.0 | 18.0 |
| Power source | | | 1 Phase 220-240V, 50Hz | | | | | | | | |
| Power consumption | Cooling | kW | 0.03-0.03 | | | 0.04-0.04 | 0.08-0.08 | 0.15-0.15 | | | |
| | Heating | kW | 0.03-0.03 | | | 0.04-0.04 | 0.08-0.08 | 0.15-0.15 | | | |
| Sound power level | | dB(A) | 53 | | | 60 | 64 | 65 | — | — | — |
| Sound pressure level ※ | | dB(A) | Hi:33 Me:31 Lo:30 | | | | | Hi:40 Me:37 Lo:35 | | Hi:42 Me:40 Lo:37 | Hi:43 Me:41 Lo:38 |
| Exterior dimensions H x W x D | | mm | Unit:246x840x840 Panel:35x950x950 | | | | | Unit:298x840x840 Panel:35x950x950 | | | |
| Net weight | | kg | Unit:22 Panel:5.5 | | | Unit:24 Panel:5.5 | | Unit:27 Panel:5.5 | | | |
| Air flow ※ | | m³/min | Hi:18 Me:16 Lo:14 | | | | | Hi:27 Me:24 Lo:20 | | Hi:30 Me:27 Lo:23 | |
| Outside air intake | | | Possible | | | | | | | | |
| Panel | | | T-PSA-3BW-E | | | | | | | | |
| Air filter, Q'ty | | | Pocket Plastic net x1 (Washable) | | | | | | | | |
| Remote control(option) | | | wired:RC-EX1A, RC-E5, RCH-E3 wireless:RCN-T-36W-E | | | | | | | | |
| Installation data Refrigerant piping size | | mm(in) | Liquid line:ø6.35(1/4") Gas line:ø9.52(3/8") | Liquid line:ø6.35(1/4") Gas line:ø12.7(1/2") | | | Liquid line:ø9.52(3/8") Gas line:ø15.88(5/8") | | | | |

1. The data are measured under the following conditions(ISO-T1). Cooling: Indoor temp. of 27°CDB, 19°CWB, and outdoor temp. of 35°CDB. Heating: Indoor temp. of 20°CDB, and outdoor temp. of 7°CDB, 6°CWB.
2. Sound pressure level indicates the value in an anechoic chamber. During operation these values are somewhat higher due to ambient conditions.

※ Powerful-Hi can be selected. Sound pressure level: FDT28/36/45 37dB(A), FDT56 39dB(A), FDT71 46dB(A), FDT90/112/140/160 51dB(A). Air flow: FDT28/36/45/56 20m³/min, FDT71 28m³/min, FDT90/112/140/160 37m³/min.

# Dimensions

All measurements in mm.

## FDT28KXE6F, 36KXE6F, 45KXE6F, 56KXE6F, 71KXE6F

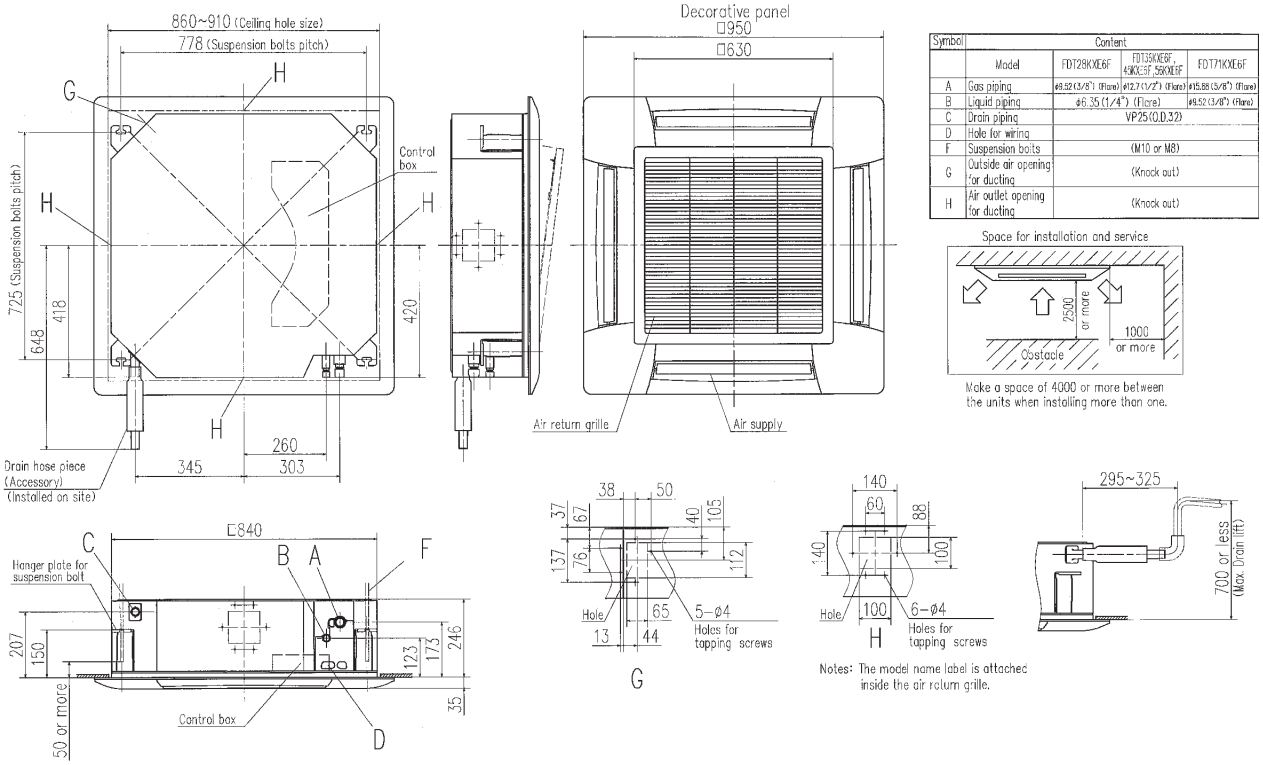


| Symbol | Content | | | |
|---|---|---|---|---|
| | Model | FDT28KXE6F | FDT35KXE6F, 45KXE6F, 56KXE6F | FDT71KXE6F |
| A | Gas piping | ø9.52 (3/8") (Flare) | ø12.7 (1/2") (Flare) | ø15.88 (5/8") (Flare) |
| B | Liquid piping | ø6.35 (1/4") (Flare) | | ø9.52 (3/8") (Flare) |
| C | Drain piping | VP25 (O.D.32) | | |
| D | Hole for wiring | | | |
| F | Suspension bolts | (M10 or M8) | | |
| G | Outside air opening for ducting | (Knock out) | | |
| H | Air outlet opening for ducting | (Knock out) | | |

## FDT90KXE6F, 112KXE6F, 140KXE6F, 160KXE6F

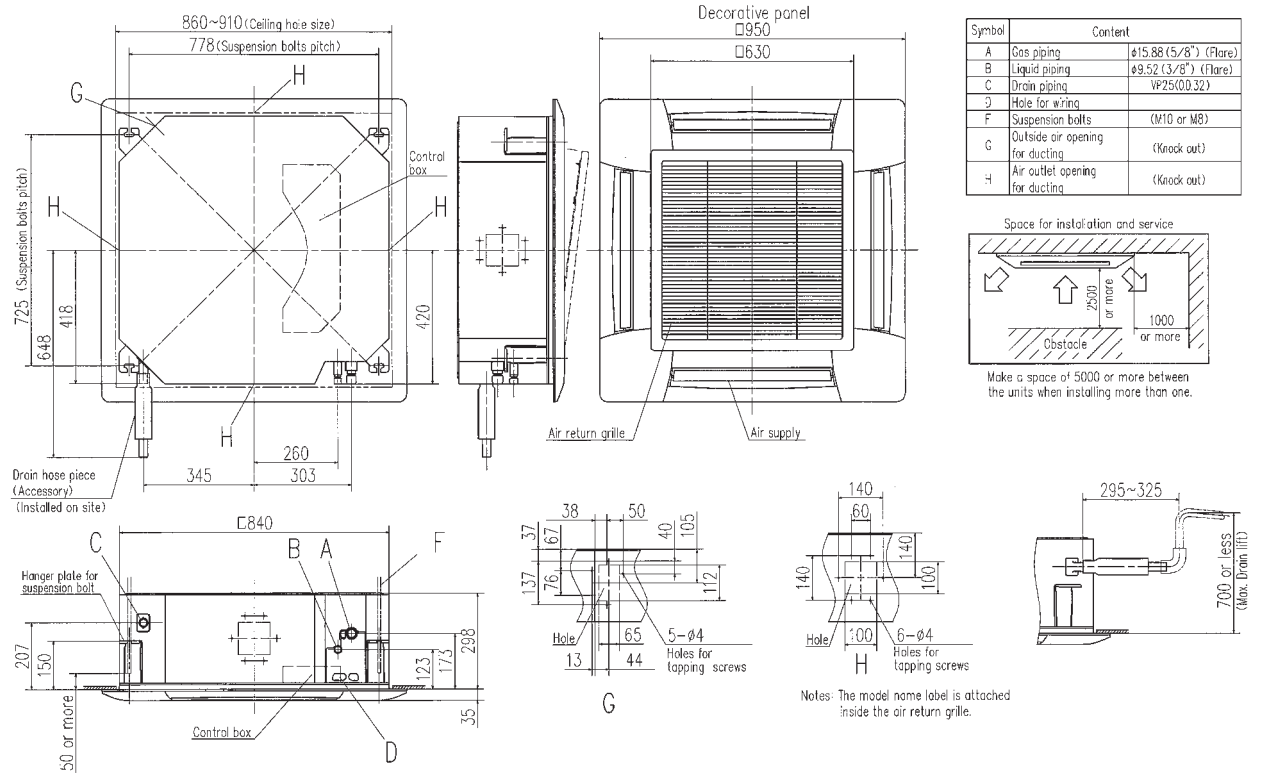


| Symbol | Content | |
|---|---|---|
| A | Gas piping | ø15.88 (5/8") (Flare) |
| B | Liquid piping | ø9.52 (3/8") (Flare) |
| C | Drain piping | VP25 (O.D.32) |
| D | Hole for wiring | |
| F | Suspension bolts | (M10 or M8) |
| G | Outside air opening for ducting | (Knock out) |
| H | Air outlet opening for ducting | (Knock out) |

# Ceiling Cassette -4way Compact (600x600mm)-FDTC

Fits into standard 600 x 600 ceiling

**Model No.**

FDTC15KXE6F
FDTC22KXE6F
FDTC28KXE6F
FDTC36KXE6F
FDTC45KXE6F
FDTC56KXE6F

**Remote control (option)**

Wired

RC-EX1A RC-E5 RCH-E3

Wireless

RCN-TC-24W-ER

## Individual flap control system

According to room temperature conditions, four directions of air flow can be controlled by individual flap as preferred.
Individual flap control is available even after installation.

## Flap control system

Selection of flap position is possible. Individual flaps can be set at different angles.

* RCH-E3 is not applicable to the Individual flap control system and the flap control system.

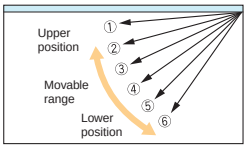


## Taking OA (Outside Air) into inside

**OA Spacer TC-OAS-E (option)**
**Joint Duct TC-OAD-E (option)**

Utilizing OA spacer which comes as optional equipment, outside air can be taken inside.

Using 1 joint duct:
OA up to 1.3m³/min.
Using 2 joint ducts:
OA from 1.3 to 2.6m³/min.

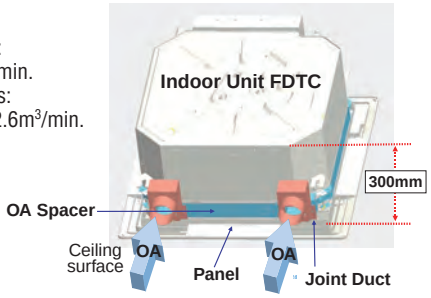


## Quiet operation (Sound pressure level in the Lo mode.)

The industry's lowest sound pressure level:25dB(A) of FDTC15KXE6F was achieved by Optimizing fan speed and distributor size.

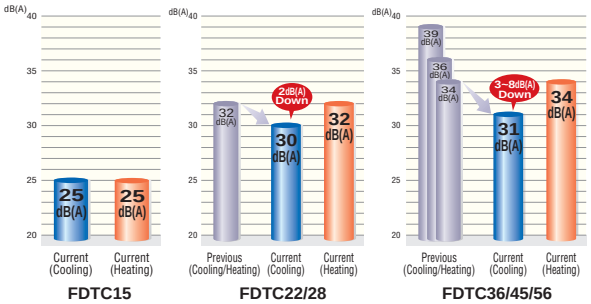


# Specifications

| Item | | Model | FDTC15KXE6F | FDTC22KXE6F | FDTC28KXE6F | FDTC36KXE6F | FDTC45KXE6F | FDTC56KXE6F |
|---|---|---|---|---|---|---|---|---|
| Nominal cooling capacity | | kW | 1.5 | 2.2 | 2.8 | 3.6 | 4.5 | 5.6 |
| Nominal heating capacity | | kW | 1.7 | 2.5 | 3.2 | 4.0 | 5.0 | 6.3 |
| Power source | | | 1 Phase 220-240V, 50Hz | | | | | |
| Power consumption | Cooling | kW | 0.02-0.02 | 0.03-0.03 | | | 0.05-0.05 | |
| | Heating | | 0.02-0.02 | 0.03-0.03 | | | 0.05-0.05 | |
| Sound power level | | dB(A) | 56 | | | 58 | 60 | |
| Sound pressure level ※ | Cooling | dB(A) | Hi:32 Me:28 Lo:25 | Hi:35 Me:33 Lo:30 | | Hi:38 Me:36 Lo:31 | Hi:40 Me:37 Lo:31 | Hi:45 Me:39 Lo:31 |
| | Heating | | Hi:32 Me:28 Lo:25 | Hi:35 Me:33 Lo:32 | | Hi:38 Me:36 Lo:34 | Hi:40 Me:37 Lo:34 | Hi:45 Me:39 Lo:34 |
| Exterior dimensions H x W x D | | mm | Unit:248x570x570 Panel:35x700x700 | | | | | |
| Net weight | | kg | Unit:14 Panel:3.5 | | | Unit:15 Panel:3.5 | | |
| Air flow ※ | Cooling | m³/min | Hi:7 Me:5.5 Lo:4.5 | Hi:9.5 Me:8.5 Lo:7 | | Hi:10 Me:9 Lo:7 | Hi:11 Me:9 Lo:7 | Hi:13 Me:10 Lo:7 |
| | Heating | | Hi:7 Me:5.5 Lo:4.5 | Hi:9.5 Me:8.5 Lo:8 | | Hi:10 Me:9 Lo:8 | Hi:11 Me:9 Lo:8 | Hi:13 Me:10 Lo:8 |
| Outside air intake | | | Possible with OA Spacer TC-OAS-E & Joint Duct TC-OAD-E | | | | | |
| Panel | | | TC-PSA-25W-E | | | | | |
| Air filter, Q'ty | | | Pocket Plastic net x1 (Washable) | | | | | |
| Remote control(option) | | | wired:RC-EX1A, RC-E5, RCH-E3 wireless:RCN-TC-24W-ER | | | | | |
| Installation data Refrigerant piping size | | mm(in) | Liquid line:ø6.35(1/4") Gas line:ø9.52(3/8") | | | Liquid line:ø6.35(1/4") Gas line:ø12.7(1/2") | | |

1. The data are measured under the following conditions(ISO-T1). Cooling: Indoor temp. of 27°CDB, 19°CWB, and outdoor temp. of 35°CDB. Heating: Indoor temp. of 20°CDB, and outdoor temp. of 7°CDB, 6°CWB.
2. Sound pressure level indicates the value in an anechoic chamber. During operation these values are somewhat higher due to ambient conditions.

※ Powerful-Hi can be selected. Sound pressure level: FDTC15 34dB(A), FDTC22/28 44dB(A), FDTC36 46dB(A), FDTC45 48dB(A), FDTC56 49dB(A). Air flow: FDTC15 8m³/min, FDTC22/28 12m³/min, FDTC36 13m³/min, FDTC45 15m³/min, FDTC56 16m³/min.

# Dimensions

All measurements in mm.

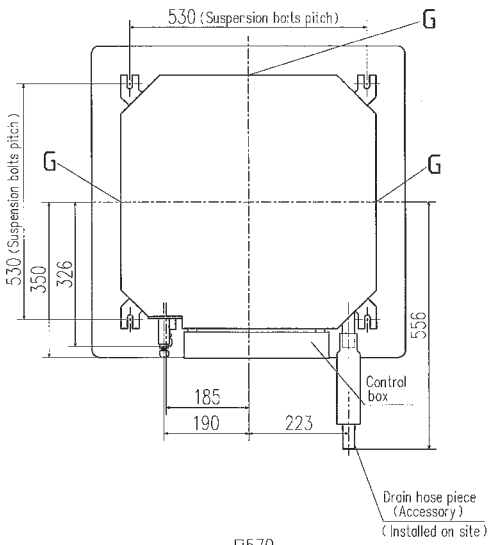


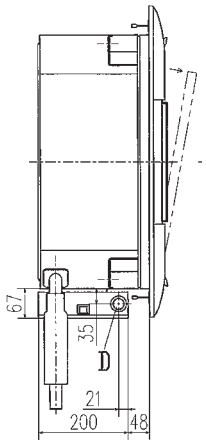


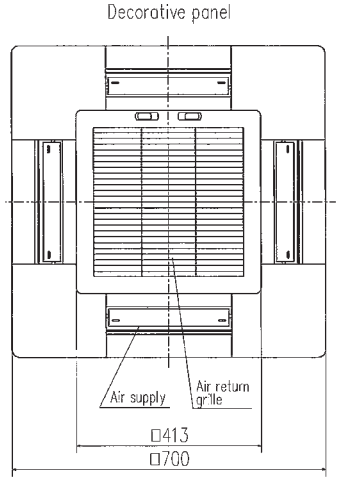


Notes (1) The model name label is attached on the control box lid.
(2) This unit is designed for 2x2 grid ceiling.
If it is installed on a ceiling other than 2x2 grid ceiling, provide an inspection port on the control box side.

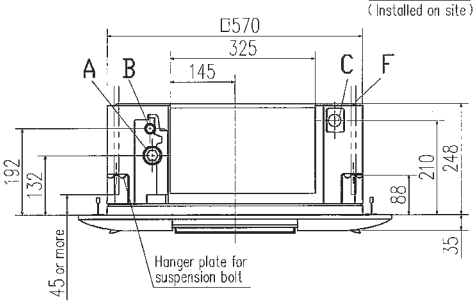


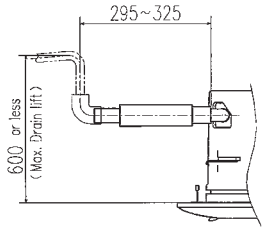


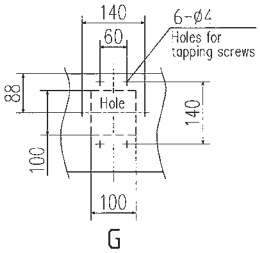


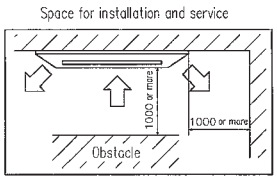


Make a space of 4000 or more between the units when installing more than one.

| Symbol | Content | | |
|---|---|---|---|
| | Model | FDTC15KXE6F, 22KXE6F, 28KXE6F | FDTC36KXE6F, 45KXE6F, 56KXE6F |
| A | Gas piping | φ9.52 (3/8") (Flare) | φ12.7 (1/2") (Flare) |
| B | Liquid piping | φ6.35 (1/4") (Flare) | |
| C | Drain piping | VP25(O.D.32) | |
| D | Hole for wiring | φ25 | |
| F | Suspension bolts | (M10 or M8) | |
| G | Air outlet opening for ducting | (Knock out) | |

Ultra slim design at just 248mm above the ceiling

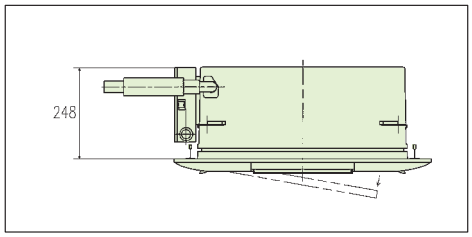


Condensate drain pump included as standard

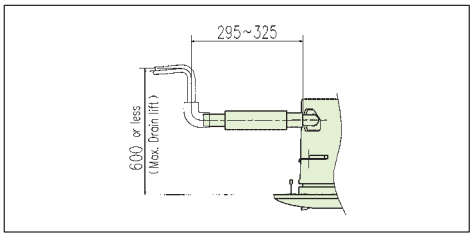

# Ceiling Cassette -2way-
# FDTW

**Model No.**

| | |
|---|---|
| FDTW28KXE6F | FDTW90KXE6F |
| FDTW45KXE6F | FDTW112KXE6F |
| FDTW56KXE6F | FDTW140KXE6F |
| FDTW71KXE6F | |

FDTW28~71

FDTW90~140

**Remote control (option)**

Wired

**RC-EX1A RC-E5 RCH-E3**

Wireless

**RCN-TW-E**

## Individual flap control system

According to room temperature conditions, four directions air flow can be controlled individually by flap control system.
Due to optimization of outlet design of air flow our new advanced technology, sufficient air flow is secured and long reach of air flow is achieved.

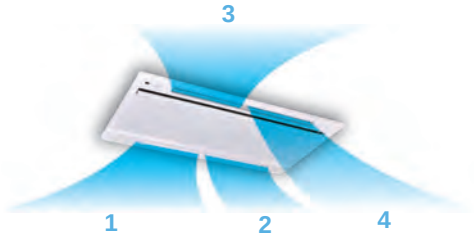


## Flap control system

The flap can swing within the range of upper and lower flap position selected with wired remote control.

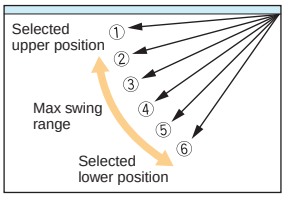


*Wireless remote control and RCH-E3 is not applicable to the individual flap control system and the flap control system.

## Installation workability

### Drainage spout

Drainage flow test can be done easily by use of this drainage spout.

### Transparent access hole to drain pan

Dirt condition of the bottom of a drain pan can be checked through this transparent access hole without removing drain pan.

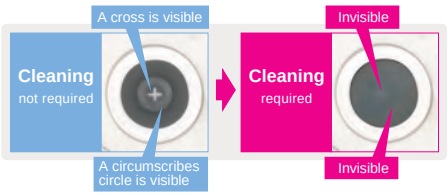


## 750mm Drain Pump

Drain can be discharged upward by 750mm from the ceiling surface close to the indoor unit. It allows a piping layout with a high degree of freedom depending on the installation location.

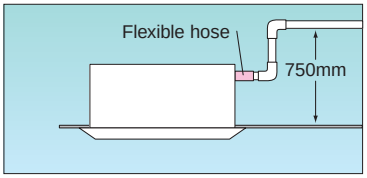


# Specifications

| Item | | Model | FDTW28KXE6F | FDTW45KXE6F | FDTW56KXE6F | FDTW71KXE6F | FDTW90KXE6F | FDTW112KXE6F | FDTW140KXE6F |
|---|---|---|---|---|---|---|---|---|---|
| Nominal cooling capacity | | kW | 2.8 | 4.5 | 5.6 | 7.1 | 9.0 | 11.2 | 14.0 |
| Nominal heating capacity | | kW | 3.2 | 5.0 | 6.3 | 8.0 | 10.0 | 12.5 | 16.0 |
| Power source | | | 1 Phase 220-240V, 50Hz | | | | | | |
| Power consumption | Cooling | kW | 0.09-0.09 | 0.10-0.10 | | 0.14-0.14 | 0.19-0.19 | | |
| | Heating | kW | 0.09-0.09 | 0.10-0.10 | | 0.14-0.14 | 0.19-0.19 | | |
| Sound power level | | dB(A) | 58 | | | | 65 | — | |
| Sound pressure level ※ | | dB(A) | Hi:38 Me:34 Lo:31 | | | | Hi:45 Me:41 Lo:37 | | |
| Exterior dimensions H x W x D | | mm | Unit:325x820x620 Panel:20x1120x680 | | | | Unit:325x1535x620 Panel:20x1835x680 | | |
| Net weight | | kg | Unit:20 Panel:8.5 | Unit:21 Panel:8.5 | | Unit:23 Panel:8.5 | Unit:35 Panel:13 | | |
| Air flow ※ | | m3/min | Hi:12 Me:10 Lo:9 | | | | Hi:27 Me:23 Lo:20 | | |
| Outside air intake | | | Possible | | | | | | |
| Panel | | | TW-PSA-26W-E | | | | TW-PSA-46W-E | | |
| Air filter, Q'ty | | | Pocket Plastic net x2 (Washable) | | | | Pocket Plastic net x3 (Washable) | | |
| Remote control(option) | | | wired:RC-EX1A, RC-E5, RCH-E3 wireless:RCN-TW-E | | | | | | |
| Installation data Refrigerant piping size | | mm(in) | Liquid line:ø6.35(1/4") Gas line:ø9.52(3/8") | Liquid line:ø6.35(1/4") Gas line:ø12.7(1/2") | | Liquid line:ø9.52(3/8") Gas line:ø15.88(5/8") | | | |

1. The data are measured under the following conditions(ISO-T1). Cooling: Indoor temp. of 27°CDB, 19°CWB, and outdoor temp. of 35°CDB. Heating: Indoor temp. of 20°CDB, and outdoor temp. of 7°CDB, 6°CWB.
2. Sound pressure level indicates the value in an anechoic chamber. During operation these values are somewhat higher due to ambient conditions.

※ Powerful-Hi can be selected. Sound pressure level: FDTW28/45/56/71 42dB(A), FDTW90/112/140 48dB(A). Air flow: FDTW28/45/56/71 14.5m3/min, FDTW90/112/140 31m3/min.

# Dimensions

All measurements in mm.

## FDTW28KXE6F, 45KXE6F, 56KXE6F, 71KXE6F

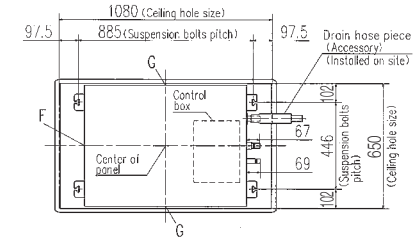


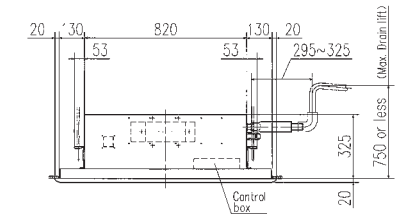


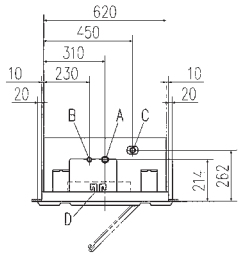


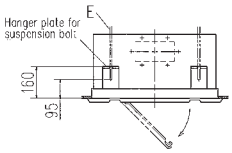


| Symbol | Content | | | |
|---|---|---|---|---|
| | Model | 28 | 45,56 | 71 |
| A | Gas piping | ø9.52 (3/8") (Flare) | ø12.7 (1/2") (Flare) | ø15.88 (5/8") (Flare) |
| B | Liquid piping | ø6.35 (1/4") (Flare) | | ø9.52 (3/8") (Flare) |
| C | Drain piping | VP25 (O.D. 32) | | |
| D | Hole for wiring | | | |
| E | Suspension bolts | (M10) | | |
| F | Outside air opening for ducting | (Knock out) | | |
| G | Air outlet opening for ducting | (Knock out) | | |

Notes (1) The model name label is attached on the lid of the control box.

Space for installation and service

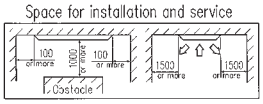


Make a space of 4000 or more between the units when installing more than one.

Decorative panel

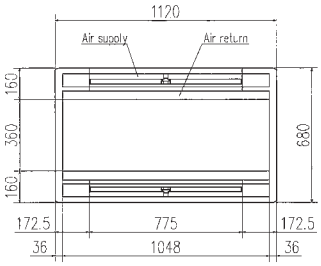


## FDTW90KXE6F, 112KXE6F, 140KXE6F

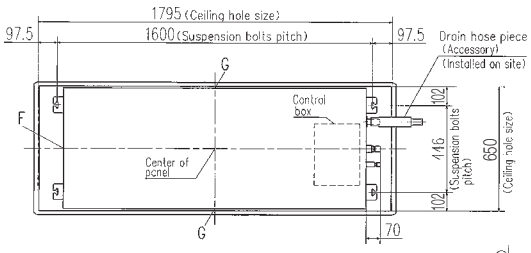


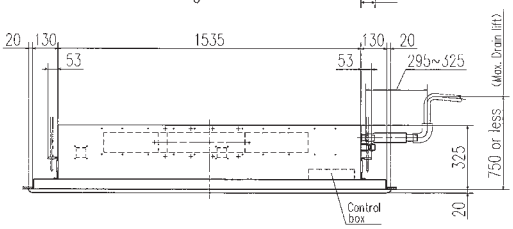


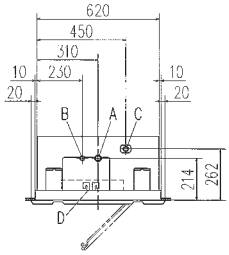


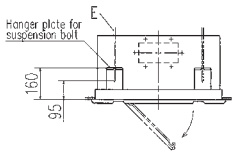


| Symbol | Content | |
|---|---|---|
| A | Gas piping | ø15.88 (5/8") (Flare) |
| B | Liquid piping | ø9.52 (3/8") (Flare) |
| C | Drain piping | VP25 (O.D. 32) |
| D | Hole for wiring | |
| E | Suspension bolts | (M10) |
| F | Outside air opening for ducting | (Knock out) |
| G | Air outlet opening for ducting | (Knock out) |

Notes (1) The model name label is attached on the lid of the control box.

Space for installation and service

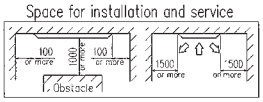


Make a space of 5000 or more between the units when installing more than one.

Decorative panel

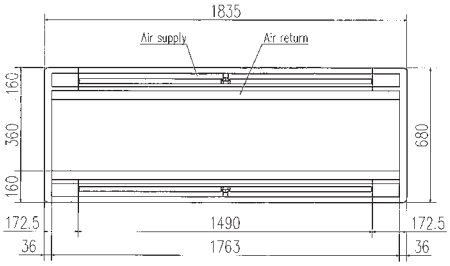

# Ceiling Cassette -1way-
# FDTS

**Model No.**
FDTS45KXE6F
FDTS71KXE6F

**Remote control (option)**

Wired

RC-EX1A

RC-E5

RCH-E3

Wireless

RCN-TS-E

## Individual flap control system

Two directions of air flow can be controlled individually by flap control system.

## Flap control system

The flap can swing within the range of upper and lower flap position selected with wired remote control.

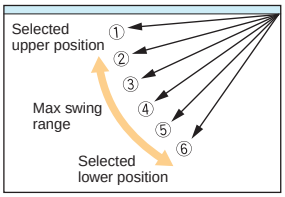


*Wireless remote control and RCH-E3 is not applicable to the individual flap control system and the flap control system.

## Compact design

Indoor unit size (W:1,150 x D:565) brings easy installation for 1,200 x 600 ceiling and Panel size (1,250 x 650) is suitable for 1,200 x 600 ceiling. Height is the industry's lowest height level 220mm and weight is 27/28kg only.

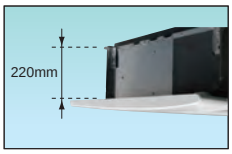


## 600mm Drain Pump

Drain can be discharged upward by 600mm from the ceiling surface close to the indoor unit.
It allows a piping layout with a high degree of freedom depending on the installation location.

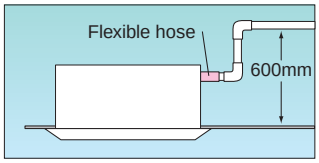


## Wireless remote control

For wireless remote control simply attach an additional panel with infrared receiver on the right side of the main decorative panel.

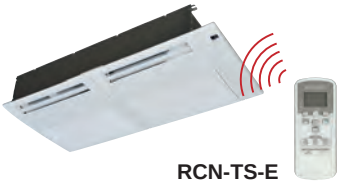

RCN-TS-E

# Specifications

| Item | | Model | FDTS45KXE6F | FDTS71KXE6F |
|---|---|---|---|---|
| Nominal cooling capacity | | kW | 4.5 | 7.1 |
| Nominal heating capacity | | kW | 5.0 | 8.0 |
| Power source | | | 1 Phase 220-240V, 50Hz | |
| Power consumption | Cooling | kW | 0.04-0.04 | 0.09-0.09 |
| | Heating | | 0.04-0.04 | 0.09-0.09 |
| Sound power level | | dB(A) | 60 | 61 |
| Sound pressure level※ | | dB(A) | Hi:40 Me:38 Lo:35 | Hi:46 Me:41 Lo:36 |
| Exterior dimensions H x W x D | | mm | Unit:220x1150x565 Panel:35x1250x650 | |
| Net weight | | kg | Unit:27 Panel:5 | Unit:28 Panel:5 |
| Air flow ※ | | m³/min | Hi:12 Me:11 Lo:9.5 | Hi:15 Me:12 Lo:9.5 |
| Outside air intake | | | Possible | |
| Panel | | | TS-PSA-3AW-E | |
| Air filter, Q'ty | | | Pocket Plastic net x2 (Washable) | |
| Remote control(option) | | | wired:RC-EX1A, RC-E5, RCH-E3 wireless:RCN-TS-E | |
| Installation data Refrigerant piping size | | mm(in) | Liquid line:ø6.35(1/4") Gas line:ø12.7(1/2") | Liquid line:ø9.52(3/8") Gas line:ø15.88(5/8") |

1. The data are measured under the following conditions(ISO-T1). Cooling: Indoor temp. of 27°CDB, 19°CWB, and outdoor temp. of 35°CDB. Heating: Indoor temp. of 20°CDB, and outdoor temp. of 7°CDB, 6°CWB.
2. Sound pressure level indicates the value in an anechoic chamber. During operation these values are somewhat higher due to ambient conditions.
※ Powerful-Hi can be selected. Sound pressure level: FDTS45 42dB(A), FDTS71 49dB(A). Air flow: FDTS45 13m³/min, FDTS71 17m³/min.

# Dimensions

All measurements in mm.

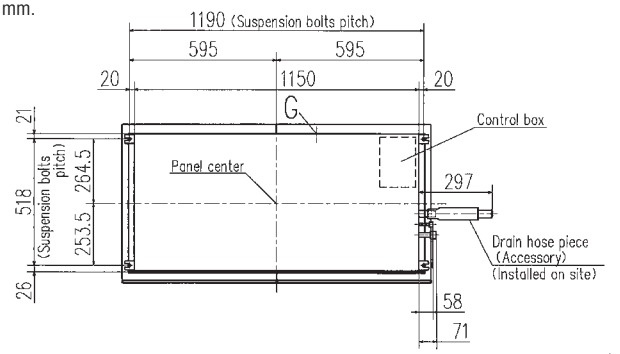


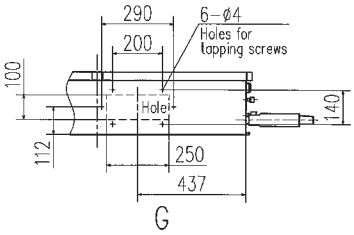


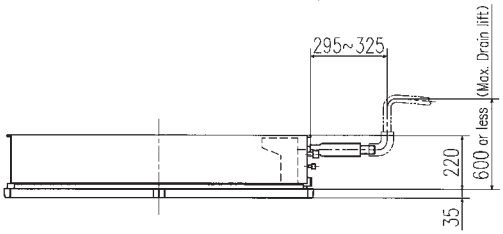


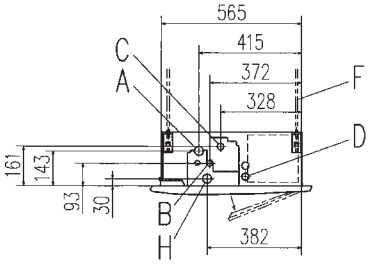


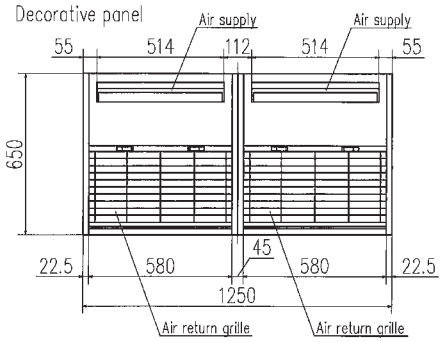


Space for installation and service

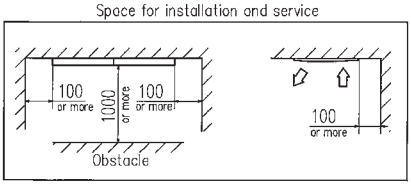


Make a space of 4000 or more between the units when installing more than one.

| Symbol | Content | | |
|---|---|---|---|
| | Model | 45 | 71 |
| A | Gas piping | φ12.7 (1/2") (Flare) | φ15.88 (5/8") (Flare) |
| B | Liquid piping | φ6.35 (1/4") (Flare) | φ9.52 (3/8") (Flare) |
| C | Drain piping | VP25 (O.D.32) | |
| D | Hole for wiring | | |
| F | Suspension bolts | (M10) | |
| G | Outside air opening for ducting | (Knock out) | |
| H | Drain piping (Gravity drainage) | VP25 (I.D.25 , O.D.32) | |

# Ceiling Cassette -1way Compact-
# FDTQ

**Model No.**
FDTQ22KXE6F
FDTQ28KXE6F
FDTQ36KXE6F

Fits into standard
600 x 600 ceiling

**Remote control (option)**

Wired

**RC-EX1A RC-E5 RCH-E3**

Wireless

**RCN-KIT3-E**

## Compact design

- **Comfortable effective cooling for small rooms, with low fan speed air flow at just 5.4m³/min.**

Optional wide panel shown for solid ceiling

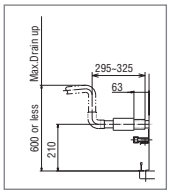


Condensate drain pump included as standard

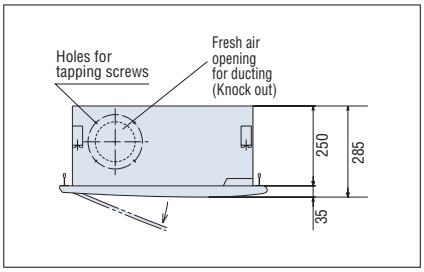


Ultra slim design at just 250mm above the ceiling

# Specifications

| Item | | Model | FDTQ22KXE6F | | | | FDTQ28KXE6F | | | | FDTQ36KXE6F | | | |
|---|---|---|---|---|---|---|---|---|---|---|---|---|---|---|
| Panel Name | | | Direct blow panel | | Duct panel | | Direct blow panel | | Duct panel | | Direct blow panel | | Duct panel | |
| Panel mode (Option) | | | TQ-PSA-15W-E | TQ-PSB-15W-E | QR-PNA-14W-ER | QR-PNB-14W-ER | TQ-PSA-15W-E | TQ-PSB-15W-E | QR-PNA-14W-ER | QR-PNB-14W-ER | TQ-PSA-15W-E | TQ-PSB-15W-E | QR-PNA-14W-ER | QR-PNB-14W-ER |
| Nominal cooling capacity | | kW | 2.2 | | | | 2.8 | | | | 3.6 | | | |
| Nominal heating capacity | | kW | 2.5 | | | | 3.2 | | | | 4.0 | | | |
| Power source | | | 1 Phase 220-240V, 50Hz | | | | | | | | | | | |
| Power consumption | Cooling | kW | 0.05-0.07 | | | | 0.05-0.07 | | | | 0.05-0.07 | | | |
| | Heating | | 0.05-0.07 | | | | 0.05-0.07 | | | | 0.05-0.07 | | | |
| Sound power level | | dB(A) | 60 | | | | | | | | | | | |
| Sound pressure level ※ | | dB(A) | Hi:41 Me:38 Lo:33 | | Hi:41 Me:38 Lo:33 | | Hi:41 Me:38 Lo:33 | | Hi:41 Me:38 Lo:33 | | Hi:41 Me:38 Lo:33 | | Hi:41 Me:38 Lo:33 | |
| Exterior dimensions H x W x D | Unit | mm | 250x570x570 | | | | 250x570x570 | | | | 250x570x570 | | | |
| | Panel | | 35x625x650 | 35x780x650 | 35x625x650 | 35x780x650 | 35x625x650 | 35x780x650 | 35x625x650 | 35x780x650 | 35x625x650 | 35x780x650 | 35x625x650 | 35x780x650 |
| Net weight | | kg | Unit:23 Panel:2.5 | Unit:23 Panel:3 | Unit:23 Panel:2.5 | Unit:23 Panel:3 | Unit:23 Panel:2.5 | Unit:23 Panel:3 | Unit:23 Panel:2.5 | Unit:23 Panel:3 | Unit:23 Panel:2.5 | Unit:23 Panel:3 | Unit:23 Panel:2.5 | Unit:23 Panel:3 |
| Air flow ※ | | m³/min | Hi:7 Me:6 Lo:5 | | Hi:7 Me:6 Lo:5 | | Hi:7 Me:6 Lo:5 | | Hi:7 Me:6 Lo:5 | | Hi:7 Me:6 Lo:5 | | Hi:7 Me:6 Lo:5 | |
| Outside air intake | | | Possible | | | | | | | | | | | |
| Air filter, Q'ty | | | Pocket Plastic net x1 (Washable) | | | | | | | | | | | |
| Remote control(option) | | | wired:RC-EX1A, RC-E5, RCH-E3 wireless:RCN-KIT3-E | | | | | | | | | | | |
| Installation data Refrigerant piping size | | mm(in) | Liquid line:ø6.35(1/4") Gas line:ø9.52(3/8") | | | | | | | | Liquid line:ø6.35(1/4") Gas line:ø12.7(1/2") | | | |

1. The data are measured under the following conditions(ISO-T1). Cooling: Indoor temp. of 27°CDB, 19°CWB, and outdoor temp. of 35°CDB. Heating: Indoor temp. of 20°CDB, and outdoor temp. of 7°CDB, 6°CWB.
2. Sound pressure level indicates the value in an anechoic chamber. During operation these values are somewhat higher due to ambient conditions.

※ Powerful-Hi can be selected. Sound pressure level: FDTQ22/38/36 45dB(A). Air flow: FDTQ22/38/36 8m³/min.

# Dimensions

All measurements in mm.

Direct blow panel (TQ-PSA-15W-E)

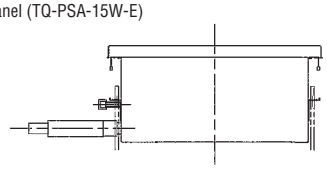

Direct blow panel (TQ-PSB-15W-E)

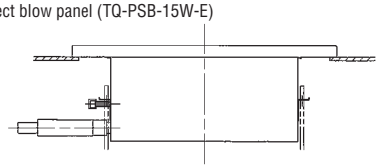

| Symbol | Content | | |
|---|---|---|---|
| | Model | FDTQ22KXE6F, 28KXE6F | FDTQ36KXE6F |
| A | Gas piping | ϕ9.52 (3/8") (Flare) | ϕ12.7 (1/2") (Flare) |
| B | Liquid piping | ϕ6.35 (1/4") (Flare) | |
| C | Drain piping | VP 25 (O.D.32) | |
| D | Hole for wiring | ϕ30 | |
| E | Suspension bolts | M10 | |
| F1,2 | Outside air opening for ducting | (Knock out) | |

Notes

(1) The model name label is attached on the fan case inside the air return grille.

(2) This unit is designed for 2X2 grid ceiling.

★ In case of Direct blow panel

Duct panel (QR-PNA-14W-ER)

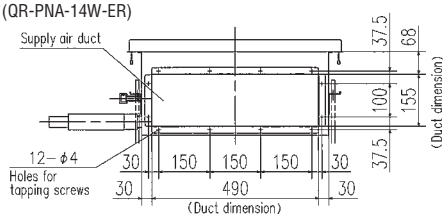


Duct panel (QR-PNB-14W-ER)

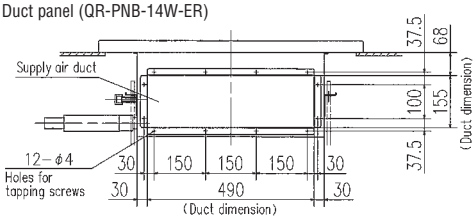


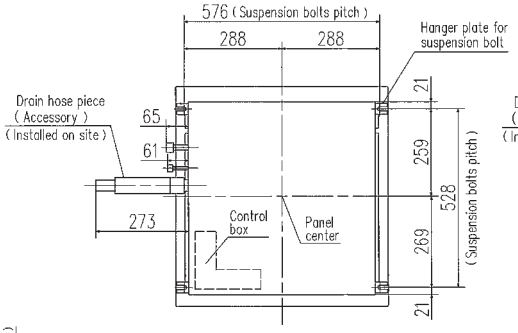


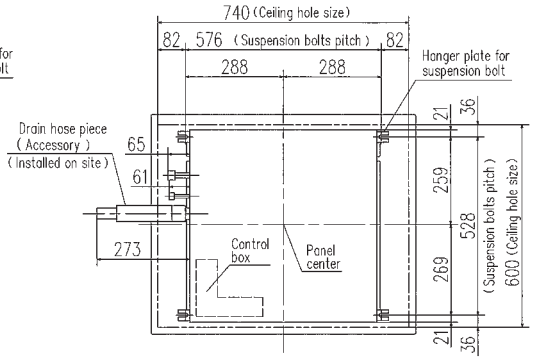


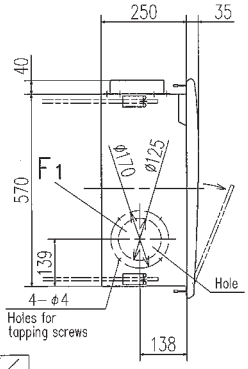


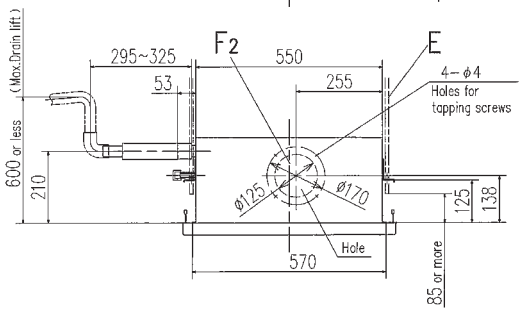


Space for installation and service

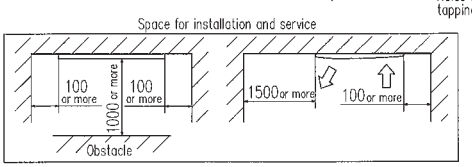


Make a space of 3000 or more between the units when installing more than one.

Decorative panel

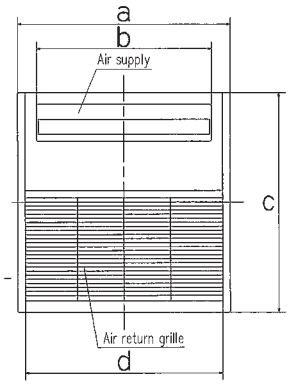


Decorative panel

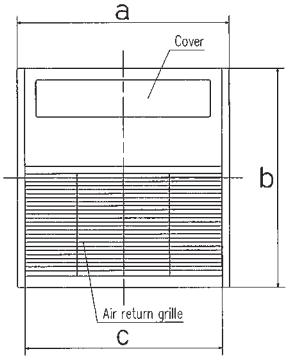


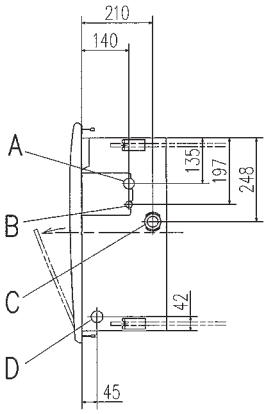


## Dimension Table

Unit:mm

| model | a | b | c | d |
|---|---|---|---|---|
| TQ-PSA-15W-E | 625 | 514 | 650 | 580 |
| TQ-PSB-15W-E | 780 | 514 | 650 | 580 |

## Dimension Table

Unit:mm

| model | a | b | c |
|---|---|---|---|
| QR-PNA-14W-ER | 625 | 650 | 580 |
| QR-PNB-14W-ER | 780 | 650 | 580 |

# Duct Connected -High Static Pressure- FDU

**Model No.**

FDU45KXE6F
FDU56KXE6F
FDU71KXE6F
FDU90KXE6F
FDU112KXE6F
FDU140KXE6F
FDU160KXE6F

**Remote control (option)**

Wired

RC-EX1A RC-E5 RCH-E3

Wireless

RCN-KIT3-E

## External Static Pressure(E.S.P) control

You can set External Static Pressure (E.S.P.) by method of manual setting on remote control. Indoor unit will control fan-speed to keep rated air flow volume at each fan speed setting. You can set required E.S.P. by wired remote control that calculated with the set air flow rate and pressure loss of the duct connected.

RC-E5

**E.S.P. button**

External Static Pressure (E.S.P.) can be set by E.S.P. button.

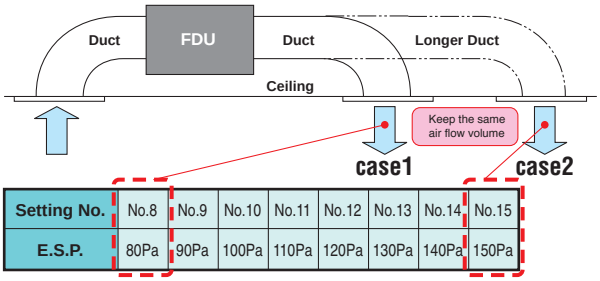


| Setting No. | No.8 | No.9 | No.10 | No.11 | No.12 | No.13 | No.14 | No.15 |
|---|---|---|---|---|---|---|---|---|
| E.S.P. | 80Pa | 90Pa | 100Pa | 110Pa | 120Pa | 130Pa | 140Pa | 150Pa |

*Range of 80~150 Pa is set at ex-factory default.
Range of 10~200 Pa is available by setting SW8-4 switch on at site.

**<Expansion of external static pressure range>**

| Previous | | Current |
|---|---|---|
| 10~130Pa | ➡ | 10~200Pa |

## Thin design

| | Previous | | Current | |
|---|---|---|---|---|
| FDU71KXE6F | 297 | ➡ | 280 | 17mm less!! |
| FDU112/140KXE6F | 350 | ➡ | 280 | 70mm less!! |

## Reduction of weight

| | Previous | | Current | |
|---|---|---|---|---|
| FDU71KXE6F | 40 | ➡ | 34 | 6kg less!! |
| FDU90KXE6F | 63 | ➡ | 34 | 29kg less!! |
| FDU112/140KXE6F | 63 | ➡ | 54 | 9kg less!! |

## Reduction of sound pressure level

(FDU71KXE6F, in the Lo mode)

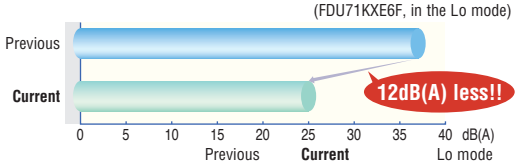


| | Previous | | Current | Lo mode |
|---|---|---|---|---|
| FDU90KXE6F | 37 | ➡ | 25 | 12dB(A) less!! |
| FDU112KXE6F | 38 | ➡ | 30 | 8dB(A) less!! |
| FDU140KXE6F | 39 | ➡ | 29 | 10dB(A) less!! |

## Transparent inspection window

Dirt condition of the bottom of a drain pan can be checked through this transparent inspection window without removing drain pan. (Please refer to P60)

# Specifications

| Item | | Model | FDU45KXE6F | FDU56KXE6F | FDU71KXE6F | FDU90KXE6F | FDU112KXE6F | FDU140KXE6F | FDU160KXE6F |
|---|---|---|---|---|---|---|---|---|---|
| Nominal cooling capacity | | kW | 4.5 | 5.6 | 7.1 | 9.0 | 11.2 | 14.0 | 16.0 |
| Nominal heating capacity | | kW | 5.0 | 6.3 | 8.0 | 10.0 | 12.5 | 16.0 | 18.0 |
| Power source | | | 1 Phase 220-240V, 50Hz | | | | | | |
| Power consumption | Cooling | kW | 0.10-0.10 | | 0.24-0.25 | | 0.31-0.32 | 0.35-0.36 | 0.42-0.43 |
| | Heating | | 0.10-0.10 | | 0.24-0.25 | | 0.31-0.32 | 0.35-0.36 | 0.42-0.43 |
| Sound power level | | dB(A) | 60 | | 65 | | — | | |
| Sound pressure level ※ | | dB(A) | Hi:32 Me:29 Lo:26 | | Hi:33 Me:29 Lo:25 | | Hi:38 Me:36 Lo:30 | Hi:40 Me:34 Lo:29 | Hi:40 Me:35 Lo:30 |
| Exterior dimensions H x W x D | | mm | 280x750x635 | | 280x950x635 | | 280x1370x740 | | |
| Net weight | | kg | 29 | | 34 | | 54 | | |
| Air flow ※ | | m3/min | Hi:10 Me:9 Lo:8 | | Hi:19 Me:15 Lo:10 | | Hi:28 Me:25 Lo:19 | Hi:32 Me:26 Lo:20 | Hi:35 Me:28 Lo:22 |
| Maximum external static pressure | | Pa | 200 | | | | | | |
| Outside air intake | | | Possible | | | | | | |
| Air filter | | | Procure locally | | | | | | |
| Remote control(option) | | | wired:RC-EX1A, RC-E5, RCH-E3 wireless:RCN-KIT3-E | | | | | | |
| Installation data Refrigerant piping size | | mm(in) | Liquid line:ø6.35(1/4") Gas line:ø12.7(1/2") | | Liquid line:ø9.52(3/8") Gas line:ø15.88(5/8") | | | | |

1. The data are measured under the following conditions(ISO-T1). Cooling: Indoor temp. of 27°CDB, 19°CWB, and outdoor temp. of 35°CDB. Heating: Indoor temp. of 20°CDB, and outdoor temp. of 7°CDB, 6°CWB. External static pressure of indoor unit is 60Pa.
2. Sound pressure level indicates the value in an anechoic chamber. During operation these values are somewhat higher due to ambient conditions.

※ Powerful-Hi can be selected. Sound pressure level: FDU45/56 37dB(A), FDU71/90 38dB(A), FDU112 44dB(A), FDU140 45dB(A),FDU160 47dB(A). Air flow: FDU45/56 13m3/min, FDU71/90 24m3/min, FDU112 36m3/min, FDU140 39m3/min, FDU160 48m3/min.

# Dimensions

All measurements in mm.

## FDU45KXE6F, 56KXE6F

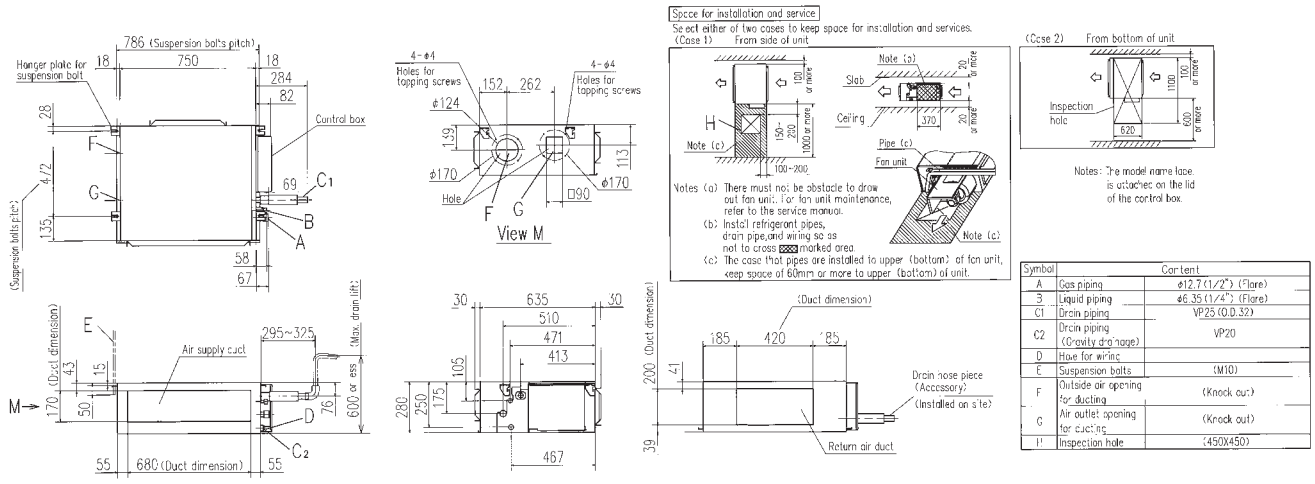


| Symbol | Content | |
|---|---|---|
| A | Gas piping | ϕ12.7 (1/2") (Flare) |
| B | Liquid piping | ϕ6.35 (1/4") (Flare) |
| C1 | Drain piping | VP25 (O.D.32) |
| C2 | Drain piping (Gravity drainage) | VP20 |
| D | Hole for wiring | |
| E | Suspension bolts | (M10) |
| F | Outside air opening for ducting | (Knock out) |
| G | Air outlet opening for ducting | (Knock out) |
| H | Inspection hole | (450X450) |

## FDU71KXE6F, 90KXE6F

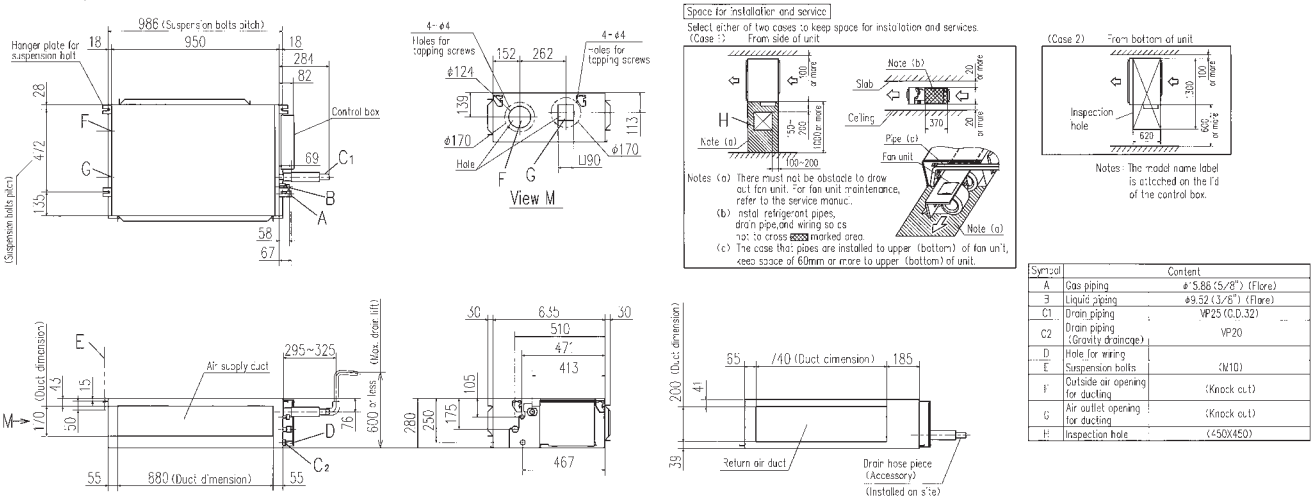


| Symbol | Content | |
|---|---|---|
| A | Gas piping | ϕ15.88 (5/8") (Flare) |
| B | Liquid piping | ϕ9.52 (3/8") (Flare) |
| C1 | Drain piping | VP25 (O.D.32) |
| C2 | Drain piping (Gravity drainage) | VP20 |
| D | Hole for wiring | |
| E | Suspension bolts | (M10) |
| F | Outside air opening for ducting | (Knock out) |
| G | Air outlet opening for ducting | (Knock out) |
| H | Inspection hole | (450X450) |

## FDU112KXE6F, 140KXE6F, 160KXE6F

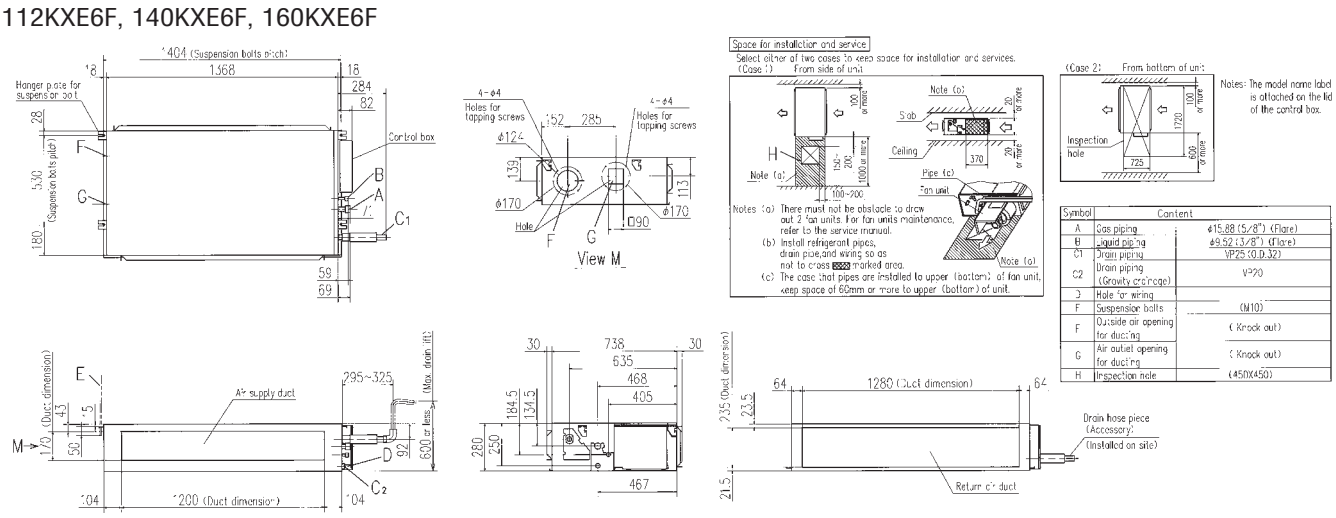


| Symbol | Content | |
|---|---|---|
| A | Gas piping | ϕ15.88 (5/8") (Flare) |
| B | Liquid piping | ϕ9.52 (3/8") (Flare) |
| C1 | Drain piping | VP25 (O.D.32) |
| C2 | Drain piping (Gravity drainage) | VP20 |
| D | Hole for wiring | |
| E | Suspension bolts | (M10) |
| F | Outside air opening for ducting | (Knock out) |
| G | Air outlet opening for ducting | (Knock out) |
| H | Inspection hole | (450X450) |

# Duct Connected -High Static Pressure- FDU

**Model No.**
FDU224KXZE1
FDU280KXZE1

**Remote control (option)**

Wired

RC-EX1A RC-E5 RCH-E3

Wireless

RCN-KIT3-E

## External Static Pressure(E.S.P) control

You can set External Static Pressure (E.S.P.) by method of manual setting on remote control. Indoor unit will control fan-speed to keep rated air flow volume at each fan speed setting. You can set required E.S.P. by wired remote control that calculated with the set air flow rate and pressure loss of the duct connected.

RC-E5

**E.S.P. button**

External Static Pressure (E.S.P.) can be set by E.S.P. button.

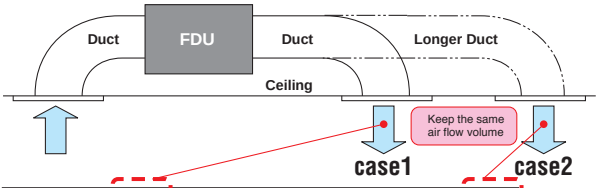


| Setting No. | No.8 | No.9 | No.10 | No.11 | No.12 | No.13 | No.14 | No.15 |
|---|---|---|---|---|---|---|---|---|
| E.S.P. | 80Pa | 90Pa | 100Pa | 110Pa | 120Pa | 130Pa | 140Pa | 150Pa |

*Range of 80~150 Pa is set at ex-factory default.
Range of 10~200 Pa is available by setting SW8-4 switch on at site.

## Quiet operation:45dB(A)

Thanks to use of DC fan motor, fan steps increase from two to four and quiet operation is achieved.
(Sound pressure level 45dB(A) in the Lo mode).

## Improvement of the serviceability

Fan unit (impeller and motor) can be pulled out from the right side of the unit. Maintenance can be available from the right side or the bottom side.
(Common for FDUM22~160KXE6F & FDU45~160KXE6F)

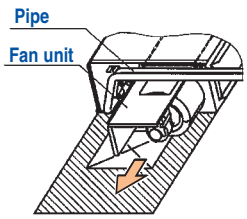


# Specifications

| Item | | Model | FDU224KXZE1 | FDU280KXZE1 |
|---|---|---|---|---|
| Nominal cooling capacity | | kW | 22.4 | 28.0 |
| Nominal heating capacity | | kW | 25.0 | 31.5 |
| Power source | | | 1 Phase 220-240V, 50Hz | |
| Power consumption | Cooling | kW | 1.16-1.20 | 1.16-1.20 |
| | Heating | | 1.16-1.20 | 1.16-1.20 |
| Sound power level | | dB(A) | 75 | |
| Sound pressure level ※ | | dB(A) | Hi:50 Me:47 Lo:45 | |
| Exterior dimensions H x W x D | | mm | 379x1600x893 | |
| Net weight | | kg | 89 | |
| Air flow ※ | | m³/min | Hi:72 Me:64 Lo:56 | |
| Maximum external static pressure | | Pa | 200 | |
| Outside air intake | | | Possible(on return duct) | |
| Air filter | | | Procure locally | |
| Remote control(option) | | | wired:RC-EX1A, RC-E5, RCH-E3 wireless:RCN-KIT3-E | |
| Installation data Refrigerant piping size | | mm(in) | Liquid line:ø9.52(3/8") Gas line:ø19.05(3/4") | Liquid line:ø9.52(3/8") Gas line:ø22.22(7/8") |

1. The data are measured under the following conditions(ISO-T1). Cooling: Indoor temp. of 27°CDB, 19°CWB, and outdoor temp. of 35°CDB. Heating: Indoor temp. of 20°CDB, and outdoor temp. of 7°CDB, 6°CWB. External static pressure of indoor unit is 72Pa.
2. Sound pressure level indicates the value in an anechoic chamber. During operation these values are somewhat higher due to ambient conditions.
※ Powerful-Hi can be selected. Sound pressure level: FDU224/280 52dB(A). Air flow: FDU224/280 80m³/min.

# Dimensions

All measurements in mm.

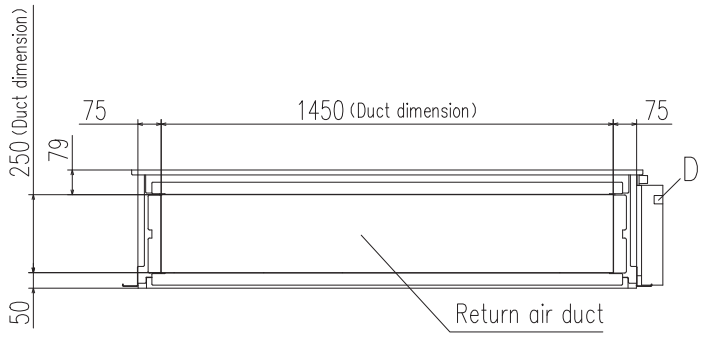


| Symbol | Content | | |
|---|---|---|---|
| | MODEL | 224 | 280 |
| A | Gas piping | ϕ19.05 (3/4") (Brazing) | ϕ22.22 (7/8") (Brazing) |
| B | Liquid piping | ϕ9.52 (3/8") (Brazing) | |
| C | Drain piping (Gravity drainage) | VP25 (O.D.32) | |
| D | Hole for wiring | | |
| E | Suspension bolts | M10 | |
| F | Inspection hole | (450X450) | |

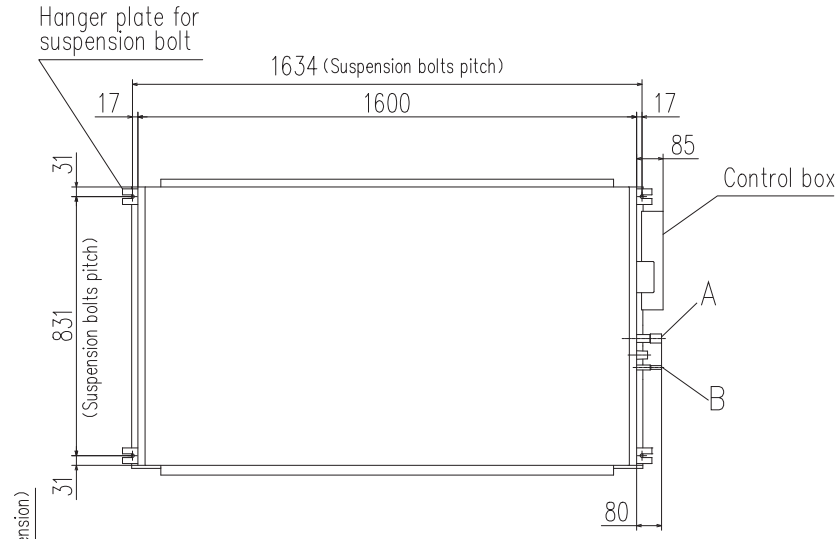


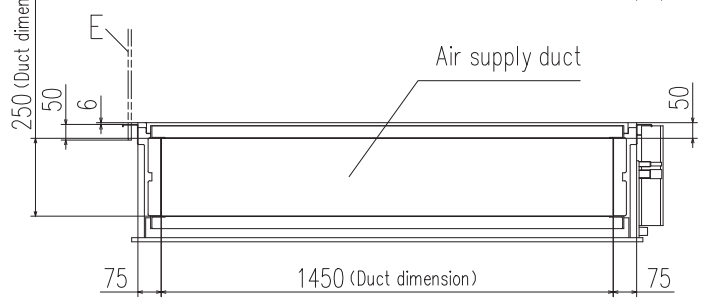


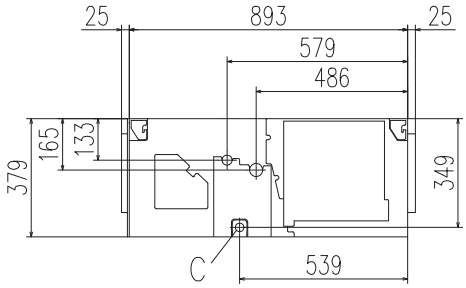


Space for installation and service

Select either of two cases to keep space for installation and services.

(Case 1) From side of unit

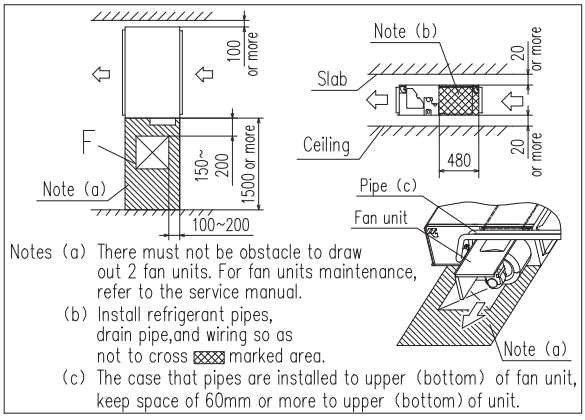


Notes (a) There must not be obstacle to draw out 2 fan units. For fan units maintenance, refer to the service manual.

(b) Install refrigerant pipes, drain pipe,and wiring so as not to cross ▩ marked area.

(c) The case that pipes are installed to upper (bottom) of fan unit, keep space of 60mm or more to upper (bottom) of unit.

(Case 2) From bottom of unit

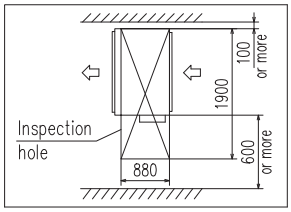


Notes (1) The model name label is attached on the lid of the control box.

# Duct Connected -Low/Middle Static Pressure- FDUM

**Model No.**

| | |
|---|---|
| FDUM22KXE6F | FDUM71KXE6F |
| FDUM28KXE6F | FDUM90KXE6F |
| FDUM36KXE6F | FDUM112KXE6F |
| FDUM45KXE6F | FDUM140KXE6F |
| FDUM56KXE6F | FDUM160KXE6F |

**Remote control (option)**

Wired

RC-EX1A RC-E5 RCH-E3

Wireless

RCN-KIT3-E

**Filter kit (option)**

**UM-FL1EF : for 22~56**
**UM-FL2EF : for 71, 90**
**UM-FL3EF : for 112, 140, 160**

*Filter pressure loss:5pa

## Automatic external static pressure (E.S.P.) control

Duct design was simplified.
Using DC motor, the most optimum air flow volume can be achieved by this automatic control.
Indoor unit will recognize external static pressure by itself automatically and keep rated air flow volume.

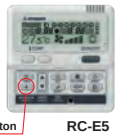

E.S.P. button RC-E5

External static pressure (E.S.P.) can be set by E.S.P. button.

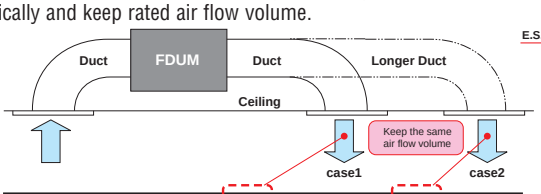


| Setting No. | No.1 | No.2 | No.3 | No.4 | No.5 | No.6 | No.7 | No.8 | No.9 | No.10 |
|---|---|---|---|---|---|---|---|---|---|---|
| E.S.P. | 10Pa | 20Pa | 30Pa | 40Pa | 50Pa | 60Pa | 70Pa | 80Pa | 90Pa | 100Pa |

## Thin design

The height of all FDUM models is only 280mm.

FDUM112/140KXE6F

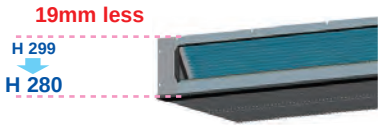


FDUM22~90KXE6F

## Improvement of the serviceability

Fan unit (impeller and motor) can be pulled out from the right side or the bottom side of the unit.
Maintenance can be available from the right side or the bottom side.

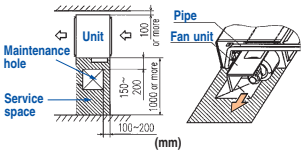


## Transparent inspection window

Dirt condition of the bottom of a drain pan can be checked through this transparent inspection window without removing drain pan. (Please refer to P60)

# Specifications

| Item | | Model | FDUM22KXE6F | FDUM28KXE6F | FDUM36KXE6F | FDUM45KXE6F | FDUM56KXE6F | FDUM71KXE6F | FDUM90KXE6F | FDUM112KXE6F | FDUM140KXE6F | FDUM160KXE6F |
|---|---|---|---|---|---|---|---|---|---|---|---|---|
| Nominal cooling capacity | | kW | 2.2 | 2.8 | 3.6 | 4.5 | 5.6 | 7.1 | 9.0 | 11.2 | 14.0 | 16.0 |
| Nominal heating capacity | | kW | 2.5 | 3.2 | 4.0 | 5.0 | 6.3 | 8.0 | 10.0 | 12.5 | 16.0 | 18.0 |
| Power source | | | 1 Phase 220-240V, 50Hz | | | | | | | | | |
| Power consumption | Cooling | kW | 0.10-0.10 | | | | | 0.20-0.20 | | 0.29-0.29 | 0.33-0.33 | 0.45-0.45 |
| | Heating | kW | 0.10-0.10 | | | | | 0.20-0.20 | | 0.29-0.29 | 0.33-0.33 | 0.45-0.45 |
| Sound power level | | dB(A) | 60 | | | | | 65 | | — | | |
| Sound pressure level※ | | dB(A) | Hi:32 Me:29 Lo:26 | | | | | Hi:33 Me:29 Lo:25 | | Hi:38 Me:36 Lo:30 | Hi:40 Me:34 Lo:29 | Hi:40 Me:35 Lo:30 |
| Exterior dimensions H x W x D | | mm | 280 x 750 x 635 | | | | | 280 x 950 x 635 | | 280 x 1370 x 740 | | |
| Net weight | | kg | 29 | | | | | 34 | | 54 | | |
| Air flow ※ | | m³/min | Hi:10 Me:9 Lo:8 | | | | | Hi:19 Me:15 Lo:10 | | Hi:28 Me:25 Lo:19 | Hi:32 Me:26 Lo:20 | Hi:35 Me:28 Lo:22 |
| Maximum external static pressure | | Pa | 100 | | | | | | | | | |
| Outside air intake | | | Possible | | | | | | | | | |
| Air filter | | | Filter kit:UM-FL1EF/UM-FL2EF/UM-FL3EF(option) | | | | | | | | | |
| Remote control(option) | | | wired:RC-EX1A, RC-E5, RCH-E3 wireless:RCN-KIT3-E | | | | | | | | | |
| Installation data Refrigerant piping size | | mm(in) | Liquid line:ø6.35(1/4") Gas line:ø9.52(3/8") | | Liquid line:ø6.35(1/4") Gas line:ø12.7(1/2") | | | Liquid line:ø9.52(3/8") Gas line:ø15.88(5/8") | | | | |

1. The data are measured under the following conditions(ISO-T1). Cooling: Indoor temp. of 27°CDB, 19°CWB, and outdoor temp. of 35°CDB. Heating: Indoor temp. of 20°CDB, and outdoor temp. of 7°CDB, 6°CWB. External static pressure of indoor unit is 35Pa(22/28/36/45/56/71/90), 60Pa(112/140/160).
2. Sound pressure level indicates the value in an anechoic chamber. During operation these values are somewhat higher due to ambient conditions.

※ Powerful-Hi can be selected. Sound pressure level: FDUM22/28/36/45/56 37dB(A), FDUM71/90 38dB(A), FDUM112 44dB(A), FDUM140 45dB(A), FDUM160 47dB(A). Air flow: FDUM22/28/36/45/56 13m³/min, FDUM71/90 24m³/min, FDUM112 36m³/min, FDUM140 39m³/min, FDUM160 48m³/min.

# Dimensions

All measurements in mm.

## FDUM22KXE6F, 28KXE6F, 36KXE6F, 45KXE6F, 56KXE6F

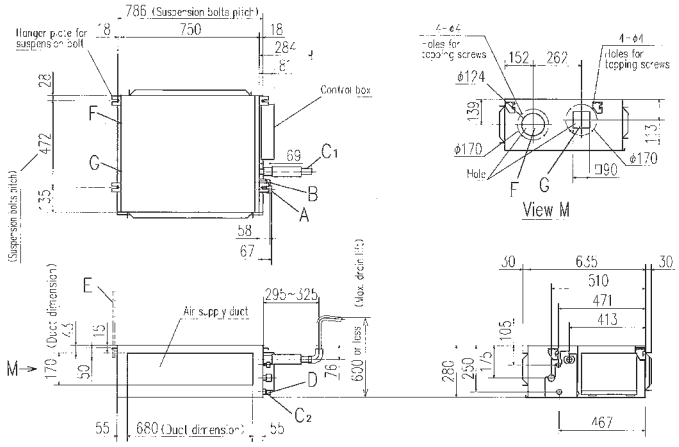


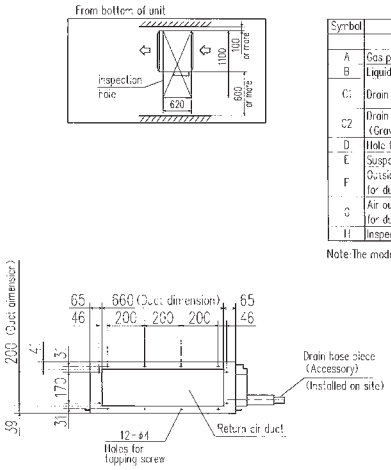


| Symbol | Content | |
|---|---|---|
| | Model | 22,28 / 36,45,56 |
| A | Gas piping | φ9.52 (3/8") (Flare) / φ12.7 (1/2") (Flare) |
| B | Liquid piping | φ6.35 (1/4") (Flare) |
| C1 | Drain piping | VP25 (O.D.32) |
| C2 | Drain piping (Gravity drainage) | VP20 |
| D | Hole for wiring | |
| E | Suspension bolts | (M10) |
| F | Outside air opening for ducting | (Knock out) |
| G | Air outlet opening for ducting | (Knock out) |
| H | Inspection hole | (450X450) |

Note: The model name label is attached on the lid of the control box.

## FDUM71KXE6F, 90KXE6F

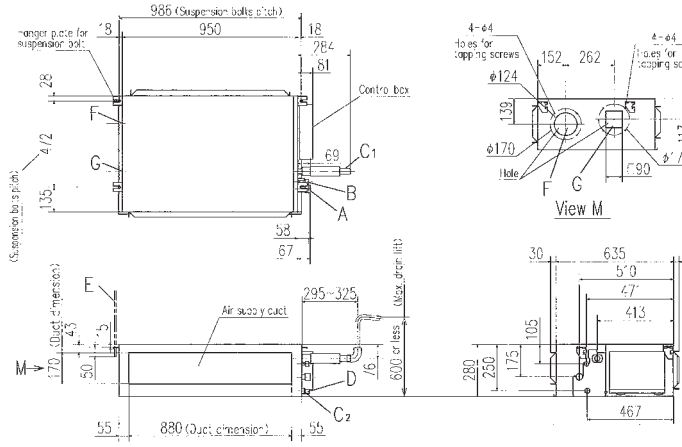


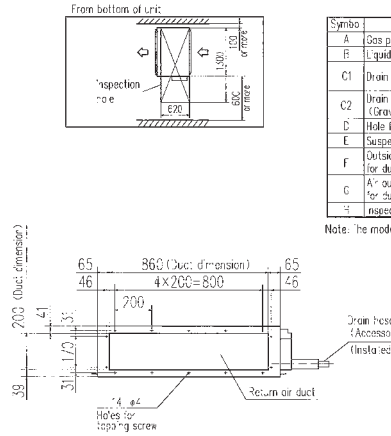


| Symbol | Content | |
|---|---|---|
| A | Gas piping | φ15.88 (5/8") (Flare) |
| B | Liquid piping | φ9.52 (3/8") (Flare) |
| C1 | Drain piping | VP25 (O.D.32) |
| C2 | Drain piping (Gravity drainage) | VP20 |
| D | Hole for wiring | |
| E | Suspension bolts | (M10) |
| F | Outside air opening for ducting | (Knock out) |
| G | Air outlet opening for ducting | (Knock out) |
| H | Inspection hole | (450X450) |

Note: The model name label is attached on the lid of the control box.

## FDUM112KXE6F, 140KXE6F, 160KXE6F

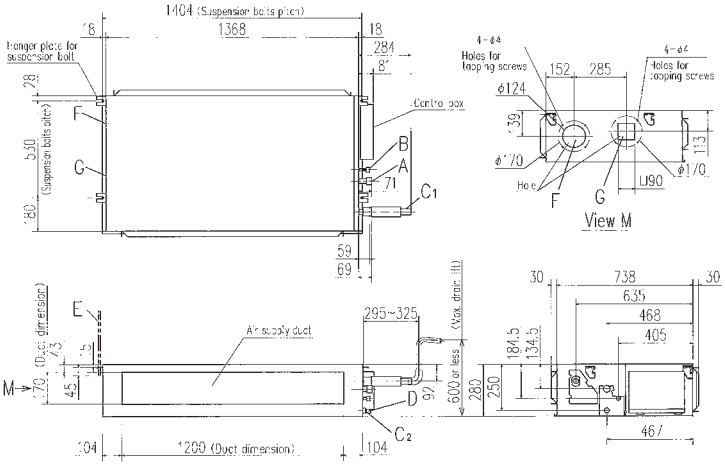


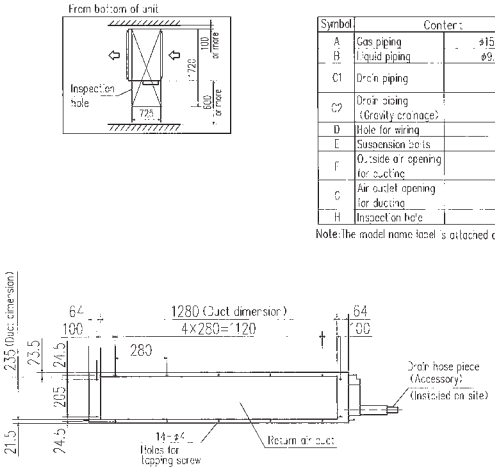


| Symbol | Content | |
|---|---|---|
| A | Gas piping | φ15.88 (5/8") (Flare) |
| B | Liquid piping | φ9.52 (3/8") (Flare) |
| C1 | Drain piping | VP25 (O.D.32) |
| C2 | Drain piping (Gravity drainage) | VP20 |
| D | Hole for wiring | |
| E | Suspension bolts | (M10) |
| F | Outside air opening for ducting | (Knock out) |
| G | Air outlet opening for ducting | (Knock out) |
| H | Inspection hole | (450X450) |

Note: The model name label is attached on the lid of the control box.

### Round duct adapter

In case of requirements of round duct adapter, please access the followings for details.

Company AIRZONE
e-mail jmoral@altracorporacion.es
tel +34-902-400-445

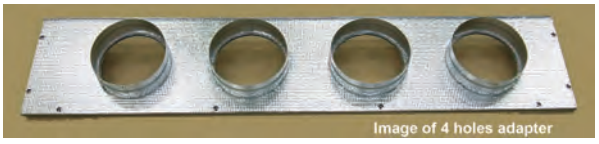
Image of 4 holes adapter

# Duct Connected (thin) -Low Static Pressure- FDUT

**Model No.**

FDUT15KXE6F-E
FDUT22KXE6F-E
FDUT28KXE6F-E
FDUT36KXE6F-E
FDUT45KXE6F-E
FDUT56KXE6F-E
FDUT71KXE6F-E

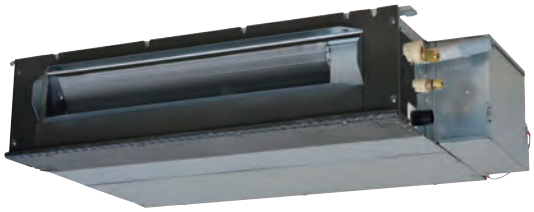

**Remote control (option)**

Wired

RC-EX1A RC-E5 RCH-E3

Wireless

RCN-KIT3-E

## Compact design

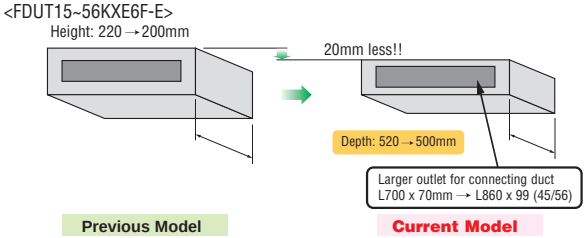


## Lower noise

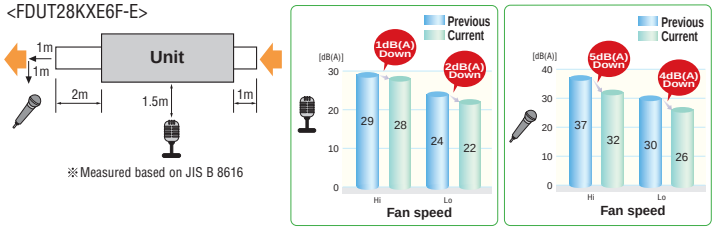


## Serviceability

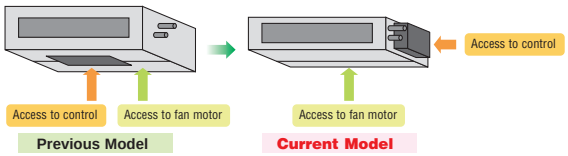


## Duct kit and filter options

| Item | Contents | for FDUT15/22/28/36KXE6F-E | for FDUT45/56KXE6F-E | for FDUT71KXE6F-E |
|---|---|---|---|---|
| Outlet duct plate | ① | UT-SAT1EF | UT-SAT2EF | UT-SAT3EF |
| Filter set | ②+③ | UT-FL1EF | UT-FL2EF | UT-FL3EF |

Filter pressure loss : 5 Pa

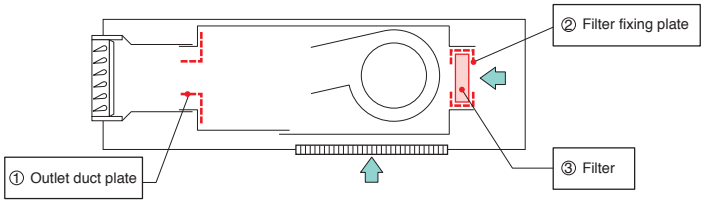


# Specifications

| Item | | Model | FDUT15KXE6F-E | FDUT22KXE6F-E | FDUT28KXE6F-E | FDUT36KXE6F-E | FDUT45KXE6F-E | FDUT56KXE6F-E | FDUT71KXE6F-E |
|---|---|---|---|---|---|---|---|---|---|
| Nominal cooling capacity | | kW | 1.5 | 2.2 | 2.8 | 3.6 | 4.5 | 5.6 | 7.1 |
| Nominal heating capacity | | kW | 1.7 | 2.5 | 3.2 | 4.0 | 5.0 | 6.0 | 8.0 |
| Power source | | | 1 Phase 220-240V, 50Hz | | | | | | |
| Power consumption | Cooling | kW | 0.06-0.06 | 0.07-0.07 | | | 0.08-0.08 | | 0.08-0.08 |
| | Heating | kW | 0.06-0.06 | 0.07-0.07 | | | 0.08-0.08 | | 0.07-0.07 |
| Sound power level | | dB(A) | 52 | | | 57 | 58 | 59 | |
| Sound pressure level ① | | dB(A) | Hi:28 Me:26 Lo:22 | Hi:28 Me:26 Lo:22 | | Hi:33 Me:30 Lo:26 | Hi:34 Me:32 Lo:28 | Hi:35 Me:33 Lo:30 | Hi:35 Me:31 Lo:28 |
| Sound pressure level ② | | dB(A) | Hi:32 Me:29 Lo:25 | Hi:32 Me:29 Lo:26 | | Hi:37 Me:34 Lo:28 | Hi:36 Me:33 Lo:27 | Hi:38 Me:33 Lo:29 | Hi:41 Me:37 Lo:32 |
| Exterior dimensions H x W x D | | mm | 200x750x500 | | | | 200x950x500 | | 220x1150x565 |
| Net weight | | kg | 21 | | | 22 | 25 | | 31 |
| Air flow (Standard) | | m³/min | Hi:6 Me:5 Lo:4 | Hi:7.5 Me:6 Lo:5 | | Hi:8.5 Me:7 Lo:5.5 | Hi:11.5 Me:9 Lo:7 | Hi:12.5 Me:9 Lo:7.2 | Hi:16 Me:13 Lo:9.5 |
| External Static pressure | | Pa | Standard:10, Max:35 | | | | Standard:10, Max:50 | | |
| Outside air intake | | | Possible from return duct | | | | | | |
| Air filter | | | Filter set:UT-FL1EF/UT-FL2EF/UT-FL3EF(option) | | | | | | |
| Remote control(option) | | | wired:RC-EX1A, RC-E5, RCH-E3 wireless:RCN-KIT3-E | | | | | | |
| Installation data Refrigerant piping size | | mm(in) | Liquid line:ø6.35(1/4") Gas line:ø9.52(3/8") | | | Liquid line:ø6.35(1/4") Gas line:ø12.7(1/2") | | | Liquid line:ø9.52(3/8") Gas line:ø15.88(5/8") |

1. The data are measured under the following conditions(ISO-T1). Cooling: Indoor temp. of 27°CDB, 19°CWB, and outdoor temp. of 35°CDB. Heating: Indoor temp. of 20°CDB, and outdoor temp. of 7°CDB, 6°CWB. External static pressure of indoor unit is 10Pa.
2. The data of nominal cooling and heating capacity and sound pressure level are measured with 10Pa of external static pressure.
3. The sound level indicates the value of rear-intake type with duct in anechoic chamber. During operation these values are somewhat higher due to ambient conditions.
4. Sound pressure levels are values when 2m supply duct and 1m return duct are connected.
① : Mike position is 1.5m below unit, ② : Mike position is 1m in front and 1m below the air supply duct.

# Dimensions

All measurements in mm.

## FDUT15KXE6F-E, 22KXE6F-E, 28KXE6F-E, 36KXE6F-E

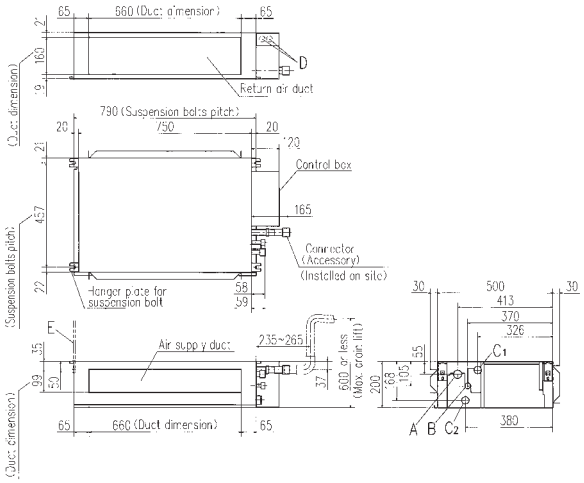


| Symbol | Content | | |
|---|---|---|---|
| | Model | 15,22,28 | 36 |
| A | Gas piping | ø9.52 (3/8") (flare) | ø12.7 (1/2") (flare) |
| B | Liquid piping | ø6.35 (1/4") (Flare) | |
| C1 | Drain piping | VP25 (I.D.25 , O.D.32) (Used with attached connector) | |
| C2 | Drain piping (Gravity drainage) | VP25 (I.D.25 , O.D.32) (Used with attached connector) | |
| D | Hole for wiring | ø25 x 2 | |
| E | Suspension bolts | (M10) | |
| F | Inspection hole | (450X450) , (270X170) | |

Space for installation and service

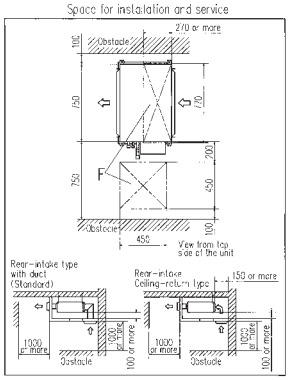


## FDUT45KXE6F-E, 56KXE6F-E

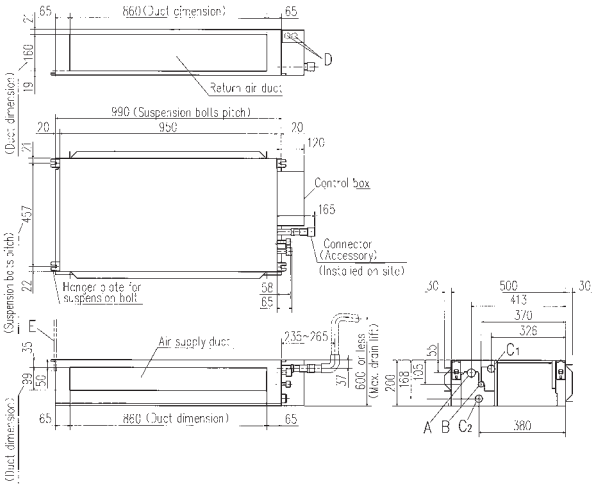


| Symbol | Content | |
|---|---|---|
| | Model | 45,56 |
| A | Gas piping | ø12.7 (1/2") (Flare) |
| B | Liquid piping | ø6.35 (1/4") (Flare) |
| C1 | Drain piping | VP25 (I.D.25 , O.D.32) (Used with attached connector) |
| C2 | Drain piping (Gravity drainage) | VP25 (I.D.25 , O.D.32) (Used with attached connector) |
| D | Hole for wiring | ø25 x 2 |
| E | Suspension bolts | (M10) |
| F | Inspection hole | (450X450) , (270X970) |

Space for installation and service

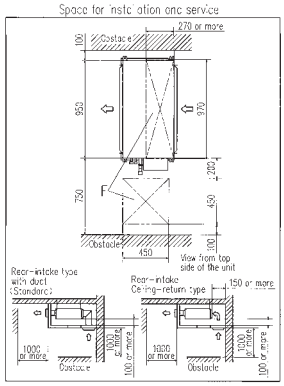


## FDUT71KXE6F-E

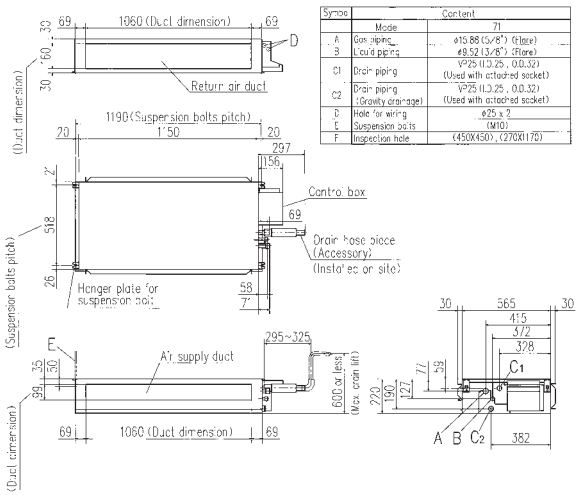


| Symbol | Content | |
|---|---|---|
| | Model | 71 |
| A | Gas piping | ø15.88 (5/8") (flare) |
| B | Liquid piping | ø9.52 (3/8") (Flare) |
| C1 | Drain piping | VP25 (I.D.25 , O.D.32) (Used with attached socket) |
| C2 | Drain piping (Gravity drainage) | VP25 (I.D.25 , O.D.32) (Used with attached socket) |
| D | Hole for wiring | ø25 x 2 |
| E | Suspension bolts | (M10) |
| F | Inspection hole | (450X450) , (270X170) |

Space for installation and service

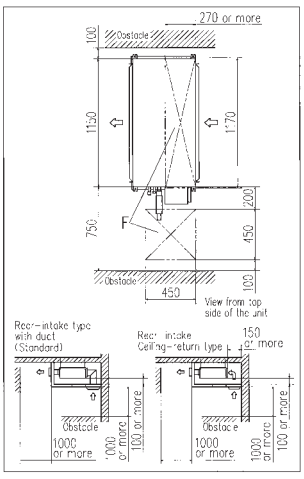

# Duct Connected (Compact & Flexible) FDUH

**Model No.**
FDUH22KXE6F
FDUH28KXE6F
FDUH36KXE6F

**Drain up kit (option)**
(600mm)
**UH-DU-E**

**Remote control (option)**

Wired

**RC-EX1A RC-E5 RCH-E3**

Wireless

**RCN-KIT3-E**

**Filter kit (option)**
**UH-FL1E**

*Filter pressure loss:5pa

## Compact and thin size, light weight

Our leading high technology has realized the best solution for air conditioning in hotels with compact and thin size units and high energy efficiency. In addition, weight is only 20kg.

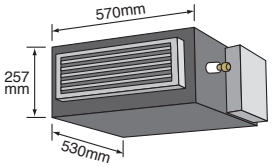


## Quiet operation

The lowest sound level in the industry can ensure comfortable stay and rest in hotels.

## Installation Flexibility

Control box and drain piping can be installed on both side of the unit and air intake to the unit is available from bottom or back side. Our highest technology can satisfy diverse installation requirements.

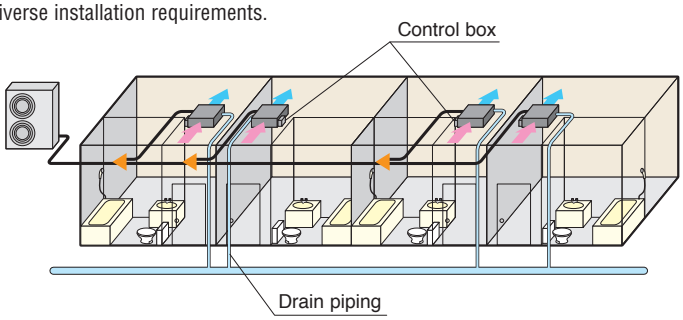


## Wired remote control

**RCH-E3 (option)**

### Simple remote control

Considering specialized usage in hotel rooms, control buttons are limited only to minimum required functions such as ON/OFF, mode, temperature setting and fan speed. It is really simple and easy to use.

# Specifications

| Item | | Model | FDUH22KXE6F | FDUH28KXE6F | FDUH36KXE6F |
|---|---|---|---|---|---|
| Nominal cooling capacity | | kW | 2.2 | 2.8 | 3.6 |
| Nominal heating capacity | | kW | 2.5 | 3.2 | 4.0 |
| Power source | | | 1 Phase 220-240V, 50Hz | | |
| Power consumption | Cooling | kW | 0.05-0.07 | | |
| | Heating | | 0.05-0.07 | | |
| Sound power level | | dB(A) | 60 | | |
| Sound pressure level ※ | | dB(A) | Hi: 33 Me: 30 Lo: 27 | | |
| Exterior dimensions HxWxD | | mm | 257x570x530 | | |
| Net weight | | kg | 22 | | |
| Air flow ※ | | m³/min | Hi: 7 Me: 6.5 Lo: 6 | | |
| External static pressure | | Pa | 30 | | |
| Outside air intake | | | Possible from return duct | | |
| Air filter | | | Filter kit:UH-FL1E(option) | | |
| Remote control(option) | | | wired:RC-EX1A, RC-E5, RCH-E3 wireless:RCN-KIT3-E | | |
| Installation data Refrigerant piping size | | mm(in) | Liquid line:ø6.35(1/4") | | Liquid line:ø6.35(1/4") |
| | | | Gas line:ø9.52(3/8") | | Gas line:ø12.7(1/2") |

1. The data are measured under the following conditions(ISO-T1). Cooling: Indoor temp. of 27°CDB, 19°CWB, and outdoor temp. of 35°CDB. Heating: Indoor temp. of 20°CDB, and outdoor temp. of 7°CDB, 6°CWB.
2. Sound pressure level indicates the value in an anechoic chamber. During operation these values are somewhat higher due to ambient conditions.

※ Powerful-Hi can be selected. Sound pressure level: FDUH22/28/36 39dB(A). Air flow: FDUH22/28/36 8.5m³/min.

# Dimensions

All measurements in mm.

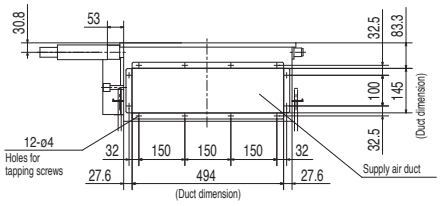


| Symbol | Content | | |
|---|---|---|---|
| | Model | FDUH22KXE6F,28KXE6F | FDUH36KXE6F |
| A | Gas piping | ø9.52 (3/8") (Flare) | ø12.7 (1/2") (Flare) |
| B | Liquid piping | ø6.35 (1/4") (Flare) | |
| $C_1$,$C_2$ | Drain piping | VP20(I.D.20, O.D.26) Note (2) | |
| D | Hole for wiring | ø30 | |
| E | Suspension bolts | (M10) | |
| F | Inspection hole | (635X890) Note (3) | |

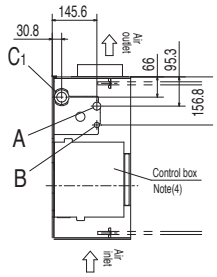


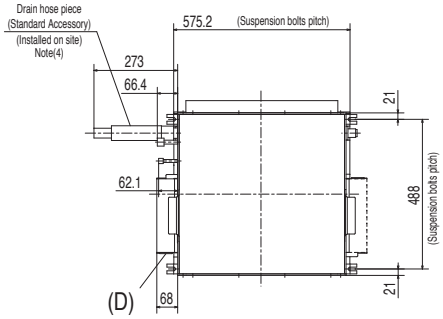


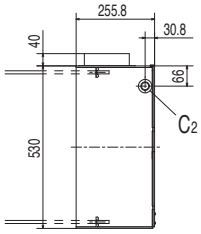


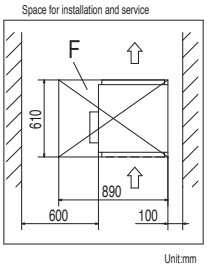


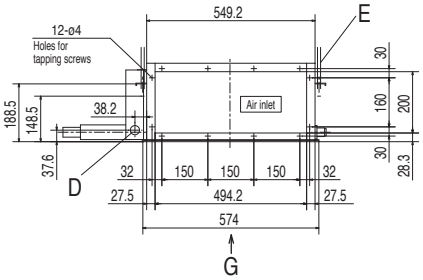


Notes

(1) The model name label is attached on the fan case inside the air return grille.

(2) Prepare the connecting socket (VP20) on site. (As for drain piping, it is possible to choose $C_1$ or $C_2$)

(3) When control box is located on the reverse side, Installation space should be modified to new location.

(4) Control box and Drain hose piece are able to be relocated on the reverse side.

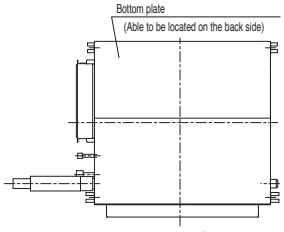


View G

## In case of Bottom air intake

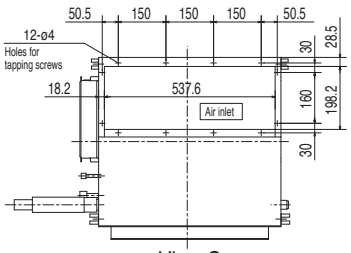


View G

(After bottom plate is replaced to back side)

## Simple remote control

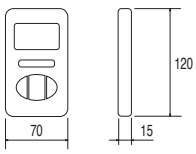

# Wall Mounted FDK

**Model No.**

FDK22KXE6F
FDK28KXE6F
FDK36KXE6F
FDK45KXE6F
FDK56KXE6F
FDK71KXE6F

FDK22~56

FDK71

**Remote control (option)**

Wired

**RC-EX1A** **RC-E5** **RCH-E3**

Wireless

**RCN-K-E : FDK22~56**
**RCN-K71-E : FDK71**

## Innovative Design

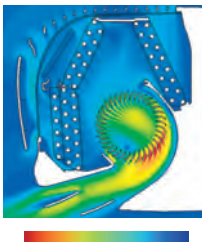

Fast ⟷ Slow
Colors in the figure show the air speed.

FDK models adopt the air flow design that's proven to minimise resistance in a CFD analysis to achieve uniform air conditioning to the furthestcorners of the room.

## Installation Workability

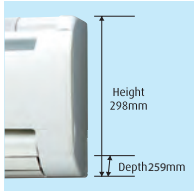


The slimmer design allows easy & neat installation even in tight spaces.

## Flap control system

Selection of flap position is possible. A flap can be set at different angles.

*RCH-E3 is not applicable to the flap control system.

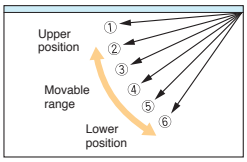


## Improved Maintainability

Also included is an easy clean mechanism where the front panel is opened/closed simply from the bottom to easily access the detachable filters.

# Specifications

| Item | | Model | FDK22KXE6F | FDK28KXE6F | FDK36KXE6F | FDK45KXE6F | FDK56KXE6F | FDK71KXE6F |
|---|---|---|---|---|---|---|---|---|
| Nominal cooling capacity | | kW | 2.2 | 2.8 | 3.6 | 4.5 | 5.6 | 7.1 |
| Nominal heating capacity | | kW | 2.5 | 3.2 | 4.0 | 5.0 | 6.3 | 8.0 |
| Power source | | | 1 Phase 220-240V, 50Hz | | | | | |
| Power consumption | Cooling | kW | 0.05-0.05 | | | 0.05-0.05 | | 0.09-0.09 |
| | Heating | | 0.04-0.04 | | | 0.05-0.05 | | 0.09-0.09 |
| Sound power level | | dB(A) | 57 | | 60 | | | |
| Sound pressure level ※ | Cooling | dB(A) | Hi:35 Me:33 Lo:31 | | Hi:41 Me:35 Lo:31 | Hi:42 Me:37 Lo:33 | Hi:46 Me:42 Lo:37 | Hi:47 Me:43 Lo:39 |
| | Heating | | Hi:35 Me:33 Lo:31 | | Hi:39 Me:35 Lo:31 | Hi:42 Me:37 Lo:33 | Hi:46 Me:42 Lo:37 | Hi:47 Me:43 Lo:39 |
| Exterior dimensions H x W x D | | mm | 298 x 840 x 259 | | | | | 318 x 1098 x 248 |
| Net weight | | kg | 12 | | | 12.5 | 13 | 15.5 |
| Air flow ※ | | m3/min | Hi:8 Me:7 Lo:6 | | Hi:10 Me:9 Lo:7 | Hi:11 Me:9 Lo:7 | Hi:14 Me:12 Lo:10 | Hi:21 Me:18 Lo:15 |
| Outside air intake | | | Not possible | | | | | |
| Air filter, Q'ty | | | Polypropylene net x2 (Washable) | | | | | |
| Remote control(option) | | | wired:RC-EX1A, RC-E5, RCH-E3 wireless:RCN-K-E (for FDK22~56), RCN-K71-E (for FDK71) | | | | | |
| Installation data Refrigerant piping size | | mm(in) | Liquid line:ø6.35(1/4") Gas line:ø9.52(3/8") | | Liquid line:ø6.35(1/4") Gas line:ø12.7(1/2") | | | Liquid line:ø9.52(3/8") Gas line:ø15.88(5/8") |

1. The data are measured under the following conditions(ISO-T1). Cooling: Indoor temp. of 27°CDB, 19°CWB, and outdoor temp. of 35°CDB. Heating: Indoor temp. of 20°CDB, and outdoor temp. of 7°CDB, 6°CWB.
2. Sound pressure level indicates the value in an anechoic chamber. During operation these values are somewhat higher due to ambient conditions.

※ Powerful-Hi can be selected. Sound pressure level: FDK22/28 38dB(A), FDK36 48dB(A)(Cooling)&42dB(A)(Heating), FDK45 48dB(A)(Cooling)&43dB(A)(Heating), FDK56 48dB(A)(Cooling)&47dB(A)(Heating), FDK71 48dB(A).
Air flow: FDK22/28 11m3/min, FDK36/45 15m3/min, FDK56 16m3/min, FDK71 24m3/min.

# Dimensions

All measurements in mm.

## FDK22KXE6F, 28KXE6F, 36KXE6F, 45KXE6F, 56KXE6F

| Symbol | Content | | |
|---|---|---|---|
| | Model | FDK22KXE6F,28KXE6F | FDK36KXE6F,45KXE6F,56KXE6F |
| A | Gas piping | ø9.52 (3/8") (Flare) | ø12.7 (1/2") (Flare) |
| B | Liquid piping | ø6.35 (1/4") (Flare) | |
| C | Hole on wall for right rear piping | (ø65) | |
| D | Hole on wall for left rear piping | (ø65) | |
| E | Drain piping | VP16 (I.D.16) | |
| F | Outlet for wiring | | |
| G | Outlet for piping (on both side) | | |

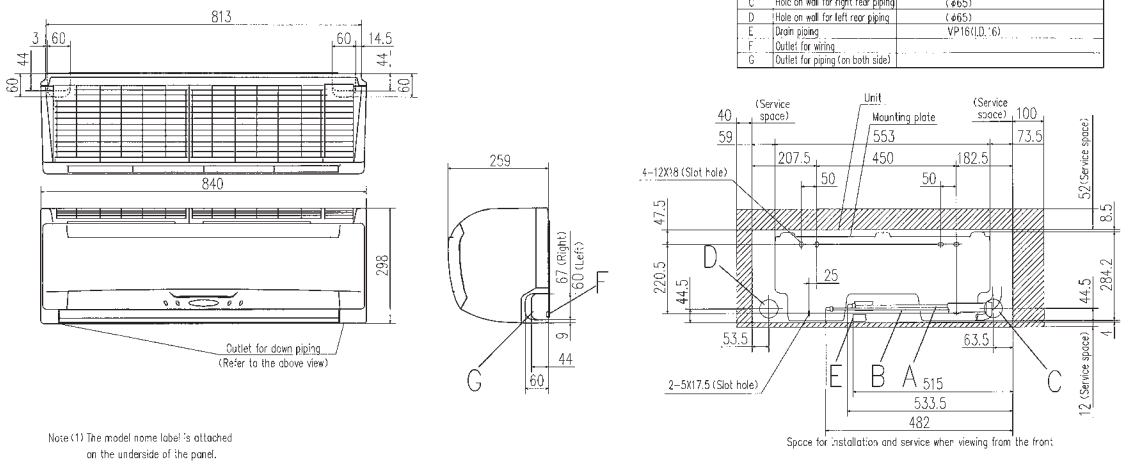


Note (1) The model name label is attached on the underside of the panel.

## FDK71KXE6F

| Symbol | Content | |
|---|---|---|
| A | Gas piping | ø15.88 (5/8") (Flare) |
| B | Liquid piping | ø9.52 (3/8") (Flare) |
| C | Hole on wall for right rear piping | (ø65) |
| D | Hole on wall for left rear piping | (ø65) |
| E | Drain piping | VP16 (I.D.16) |
| F | Outlet for wiring | |
| G | Outlet for piping (on both side) | |

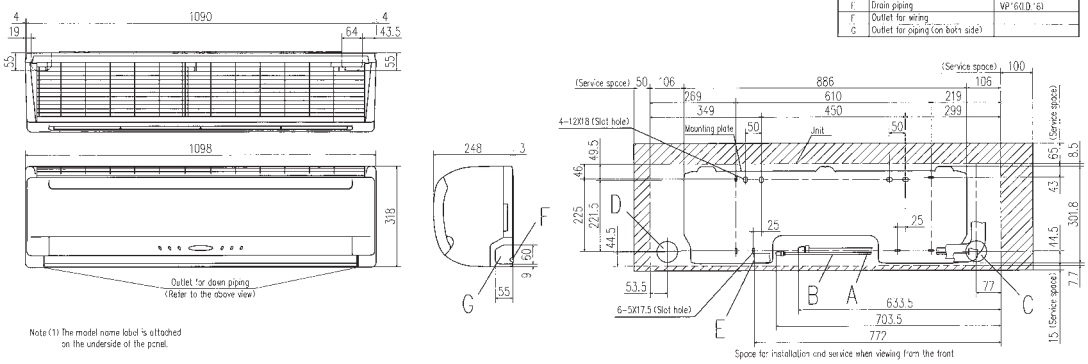


Note (1) The model name label is attached on the underside of the panel.

# Ceiling Suspended FDE

**Model No.**

FDE36KXZE1
FDE45KXZE1
FDE56KXZE1
FDE71KXZE1
FDE112KXZE1
FDE140KXZE1

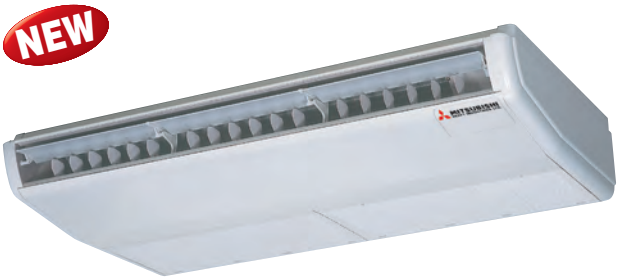


**Remote control (option)**

Wired

RC-EX1A RC-E5 RCH-E3

Wireless

RCN-E-E

## Flap control system

Selection of flap position is possible. A flap can be set at different angles.

*RCH-E3 is not applicable to the flap control system.

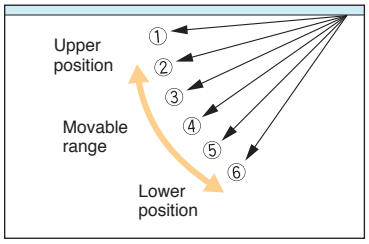


## Reduction of weight

Thanks to decreasing the numbers of fan motor from two to one, reduction of weight was achieved.

| | Current | | New | |
|---|---|---|---|---|
| FDE71 | 37 | ➡ | 33 | 4kg less!! |
| FDE112 | 49 | ➡ | 43 | 6kg less!! |
| FDE140 | 49 | ➡ | 43 | 6kg less!! |

## Reduction of sound pressure level (Lo mode)

The industry's lowest sound pressure levels were achieved by decreasing air flow volume, decreasing pressure loss with employment of one fan motor and optimizing casing and distributor shape.

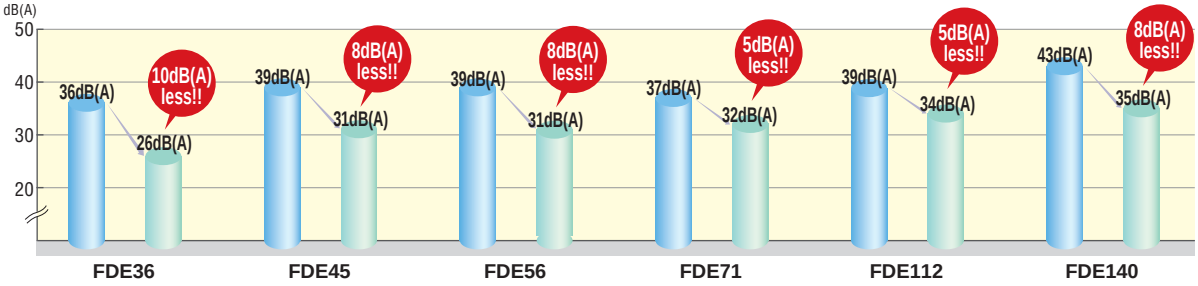


# Specifications

| Item | | Model | FDE36KXZE1 | FDE45KXZE1 | FDE56KXZE1 | FDE71KXZE1 | FDE112KXZE1 | FDE140KXZE1 |
|---|---|---|---|---|---|---|---|---|
| Nominal cooling capacity | | kW | 3.6 | 4.5 | 5.6 | 7.1 | 11.2 | 14.0 |
| Nominal heating capacity | | kW | 4.0 | 5.0 | 6.3 | 8.0 | 12.5 | 16.0 |
| Power source | | | 1 Phase 220-240V, 50Hz / 200V, 60Hz | | | | | |
| Power consumption | Cooling | kW | 0.05-0.05 | | | 0.07-0.07 | 0.10-0.10 | 0.13-0.13 |
| | Heating | kW | 0.05-0.05 | | | 0.07-0.07 | 0.10-0.10 | 0.13-0.13 |
| Sound power level | | dB(A) | 60 | | | | — | |
| Sound pressure level ※ | | dB(A) | Hi:38 Me:31 Lo:26 | Hi:38 Me:36 Lo:31 | Hi:38 Me:36 Lo:31 | Hi:39 Me:37 Lo:32 | Hi:42 Me:38 Lo:34 | Hi:43 Me:40 Lo:35 |
| Exterior dimensions H x W x D | | mm | 210 x 1070 x 690 | | | 210 x 1320 x 690 | 250 x 1620 x 690 | |
| Net weight | | kg | 28 | | | 33 | 43 | |
| Air flow ※ | | m³/min | Hi:10 Me:7 Lo:5.5 | Hi:10 Me:9 Lo:7 | | Hi:15 Me:13 Lo:10 | Hi:25 Me:21 Lo:16.5 | Hi:26 Me:23 Lo:17 |
| Outside air intake | | | Not possible | | | | | |
| Air filter, Q'ty | | | Pocket Plastic net x2 (Washable) | | | | | |
| Remote control(option) | | | wired:RC-EX1A, RC-E5, RCH-E3 wireless:RCN-E-E | | | | | |
| Installation data Refrigerant piping size | | mm(in) | Liquid line:ø6.35(1/4") Gas line:ø12.7(1/2") | | | Liquid line:ø9.52(3/8") Gas line:ø15.88(5/8") | | |

1. The data are measured under the following conditions(ISO-T1). Cooling: Indoor temp. of 27°CDB, 19°CWB, and outdoor temp. of 35°CDB. Heating: Indoor temp. of 20°CDB, and outdoor temp. of 7°CDB, 6°CWB.
2. Sound pressure level indicates the value in an anechoic chamber. During operation these values are somewhat higher due to ambient conditions.

※ Powerful-Hi can be selected. Sound pressure level: FDE36/45/56 46dB(A), FDE71 47dB(A), FDE112 45dB(A), FDE140 48dB(A). Air flow: FDE36/45/56 13m³/min, FDE71 20m³/min, FDE112 28m³/min, FDE140 32m³/min.

# Dimensions

All measurements in mm.

## FDE36KXZE1, 45KXZE1, 56KXZE1

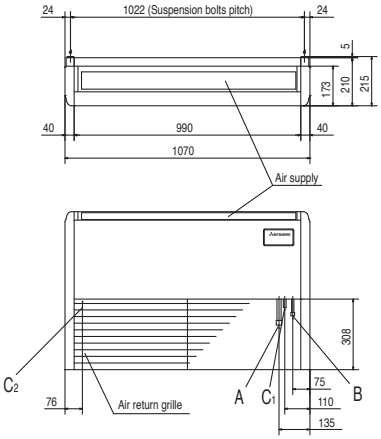


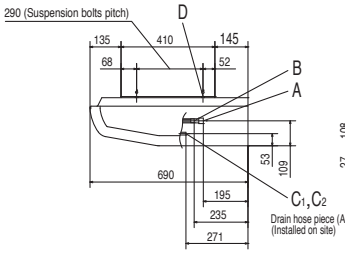


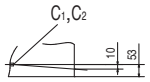


Note) The slope of drain piping inside the unit must take decline of 10mm.

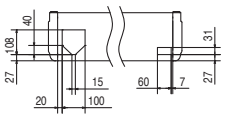


| Symbol | Content | |
|---|---|---|
| A | Gas piping | ø12.7 (1/2") (Flare) |
| B | Liquid piping | ø6.35 (1/4") (Flare) |
| C 1,2 | Drain piping | VP20 (I.D.20) |
| D | Hole for suspension bolt | (M10 or M8) |
| E | Back cutout | PE cover |
| F | Top cutout | Plate cover |
| G | Hole for drain piping (for left back) | (Knock out) |

Space for installation and service

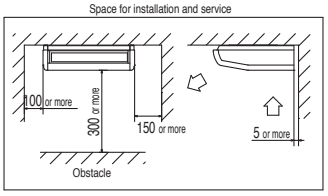


Make a space of 4000 or more between the units when installing more than one.

Position of top cutout and back cutout

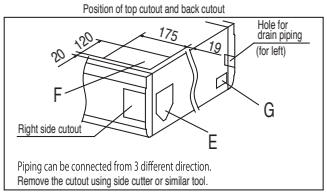


Note(1)The model name label is attached on the fan casing inside the air return grille.

## FDE71KXZE1

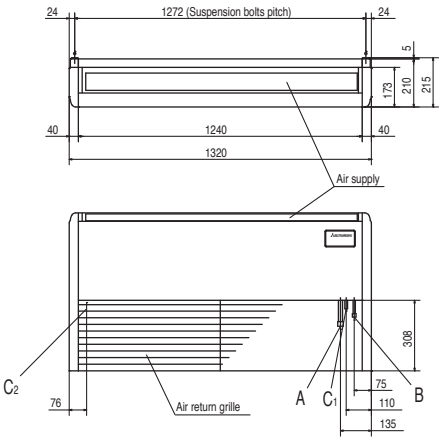


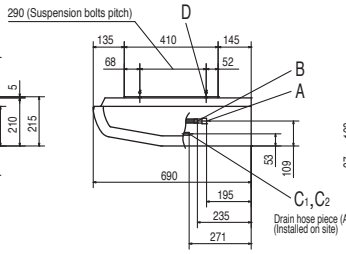


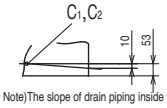


Note)The slope of drain piping inside the unit must take decline of 10mm.

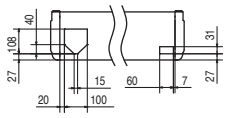


| Symbol | Content | |
|---|---|---|
| A | Gas piping | ø15.88 (5/8") (Flare) |
| B | Liquid piping | ø9.52 (3/8") (Flare) |
| C 1,2 | Drain piping | VP20 (I.D.20) |
| D | Hole for suspension bolt | (M10 or M8) |
| E | Back cutout | PE cover |
| F | Top cutout | Plate cover |
| G | Hole for drain piping(for left back) | (Knock out) |

Space for installation and service

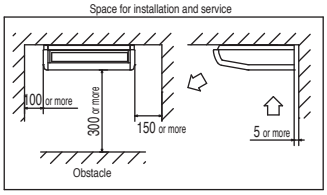


Make a space of 4500 or more between the units when installing more than one.

Position of top cutout and back cutout

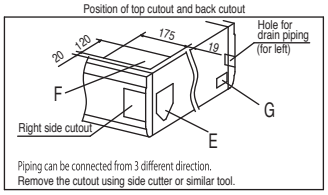


Note(1)The model name label is attached on the fan casing inside the air return grille.

## FDE112KXZE1, 140KXZE1

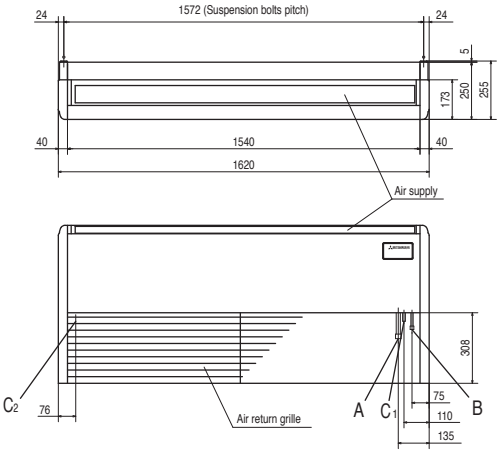


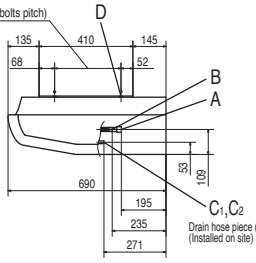


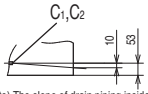


Note) The slope of drain piping inside the unit must take decline of 10mm.

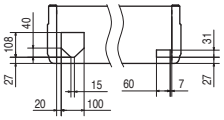


| Symbol | Content | |
|---|---|---|
| A | Gas piping | ø15.88 (5/8") (Flare) |
| B | Liquid piping | ø9.52 (3/8") (Flare) |
| C 1,2 | Drain piping | VP20 (I.D.20) |
| D | Hole for suspension bolt | (M10 or M8) |
| E | Back cutout | PE cover |
| F | Top cutout | Plate cover |
| G | Hole for drain piping (for left back) | (Knock out) |

Space for installation and service

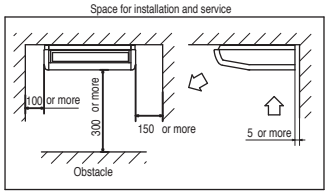


Make a space of 5000 or more between the units when installing more than one.

Position of top cutout and back cutout

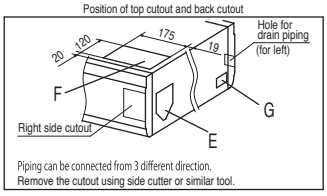


Note(1)The model name label is attached on the fan casing inside the air return grille.

# Floor Standing -2way-
# FDFW

**Model No.**
FDFW28KXE6F
FDFW45KXE6F
FDFW56KXE6F

**Remote control (option)**

Wired

RC-EX1A RC-E5 RCH-E3

Wireless

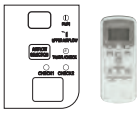

RCN-FW-E

## Sophisticated Design

With classy semi flat front panel in chic white, the new series fit in various kinds of rooms and create relaxing atmosphere. Choice of wall hanging, floor standing or behind gallery installation is available.

## Quiet Operation

Thanks to optimum balance of air outlet direction and sufficient air flow volume, the sound level has been minimized. The level of FDFW28KXE6F in the cooling lo mode is 30dB(A) only.

## Flap control system

Selection of flap position is possible. A flap can be set at different angles.

*RCH-E3 is not applicable to the flap control system.

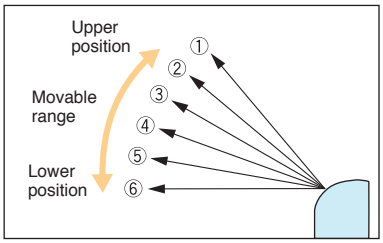


## Convenient to use operation

Simultaneous lower and upper air outlets or upper outlet can be selected by air flow direction button. Further control can be arranged by a remote control.

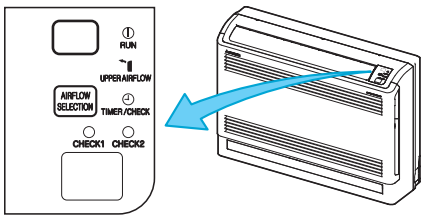


(In case of use of wireless remote control)

# Specifications

| Item | | Model | FDFW28KXE6F | FDFW45KXE6F | FDFW56KXE6F |
|---|---|---|---|---|---|
| Nominal cooling capacity | | kW | 2.8 | 4.5 | 5.6 |
| Nominal heating capacity | | kW | 3.2 | 5.0 | 6.3 |
| Power source | | | 1 Phase 220-240V, 50Hz | | |
| Power consumption | Cooling | kW | 0.02-0.02 | 0.02-0.02 | 0.03-0.03 |
| | Heating | | 0.02-0.02 | 0.02-0.02 | 0.03-0.03 |
| Sound power level | | dB(A) | 55 | 57 | 60 |
| Sound pressure level | | dB(A) | Hi:36 Me:34 Lo:30 | Hi:38 Me:36 Lo:33 | Hi:44 Me:37 Lo:33 |
| Exterior dimensions H x W x D | | mm | 600x860x238 | | |
| Net weight | | kg | 19 | 20 | |
| Air flow (Standard) | | m3/min | Hi:9 Me:8 Lo:7 | | Hi:11 Me:9 Lo:8 |
| Air filter, Q'ty | | | Polypropylene net x1 (Washable) | | |
| Remote control(option) | | | wired:RC-EX1A, RC-E5, RCH-E3 wireless:RCN-FW-E | | |
| Installation data Refrigerant piping size | | mm(in) | Liquid line:ø6.35(1/4") Gas line:ø9.52(3/8") | Liquid line:ø6.35(1/4") Gas line:ø12.7(1/2") | |

1. The data are measured under the following conditions(ISO-T1). Cooling: Indoor temp. of 27°CDB, 19°CWB, and outdoor temp. of 35°CDB. Heating: Indoor temp. of 20°CDB, and outdoor temp. of 7°CDB, 6°CWB.
2. Sound pressure level indicates the value in an anechoic chamber. During operation these values are somewhat higher due to ambient conditions.

# Dimensions

All measurements in mm.

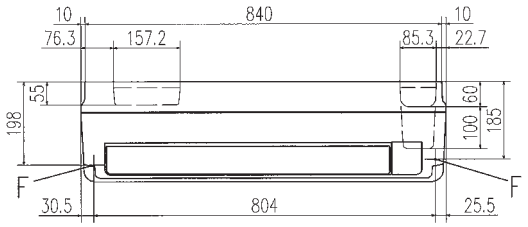


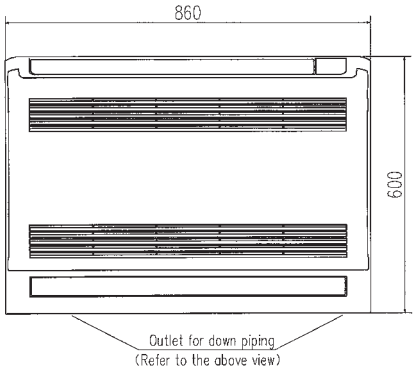


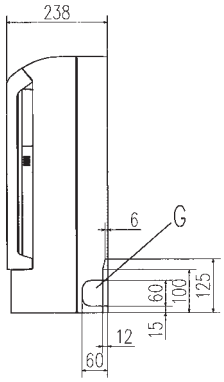


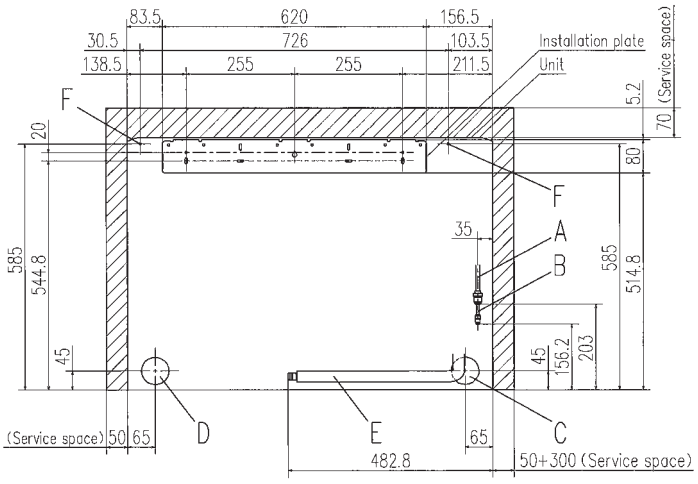


Space for installation and service when viewing from the front

| Symbol | Content | | |
|---|---|---|---|
| | Model | FDFW28KXE6F | FDFW45KXE6F,56KXE6F |
| A | Gas piping | ϕ9.52 (3/8") (Flare) | ϕ12.7 (1/2") (Flare) |
| B | Liquid piping | ϕ6.35 (1/4") (Flare) | |
| C | Hole on wall for right rear piping | (ϕ65) | |
| D | Hole on wall for left rear piping | (ϕ65) | |
| E | Drain hose | VP16 (I.D.16) | |
| F | Screw point fasten the indoor unit | ϕ5 | |
| G | Outlet for piping (on both side) | | |

Notes
(1) The model name label is attached on the rightside of the unit.
(2) In case of wall installation, leave the unit 150mm or less from the floor.

# Floor Standing (with casing) FDFL
# Floor Standing (without casing) FDFU

**Remote control (option)**

Wired

RC-EX1A RC-E5 RCH-E3

Wireless

RCN-KIT3-E

**Model No.**

FDFL71KXE6F

FDFU28KXE6F
FDFU45KXE6F
FDFU56KXE6F
FDFU71KXE6F

FDFL

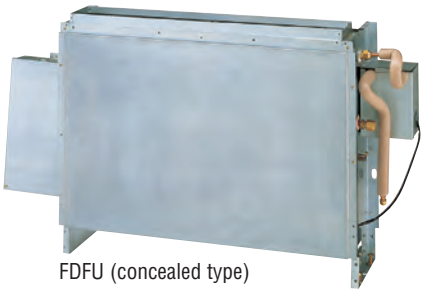

FDFU (concealed type)

Compact design at 630mm height

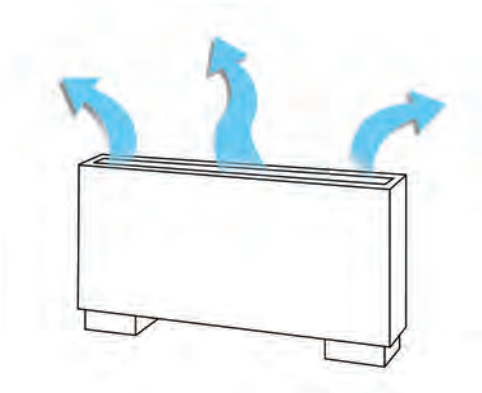

Wider airflow for optimum comfort

## Specifications

| Item | | Model | FDFL71KXE6F | FDFU28KXE6F | FDFU45KXE6F | FDFU56KXE6F | FDFU71KXE6F |
|---|---|---|---|---|---|---|---|
| Nominal cooling capacity | | kW | 7.1 | 2.8 | 4.5 | 5.6 | 7.1 |
| Nominal heating capacity | | kW | 8.0 | 3.2 | 5.0 | 6.3 | 8.0 |
| Power source | | | 1 Phase 220-240V, 50Hz | | | | |
| Power consumption | Cooling | kW | 0.09-0.10 | 0.09-0.10 | | | |
| | Heating | | 0.09-0.10 | 0.09-0.10 | | | |
| Sound power level | | dB(A) | 62 | 58 | 60 | | |
| Sound pressure level | | dB(A) | Hi:43 Me:41 Lo:40 | Hi:41 Me:38 Lo:36 | Hi:43 Me:41 Lo:40 | | |
| Exterior dimensions H x W x D | | mm | 630x1481x225 | 630x1077x225 | | | 630x1362x225 |
| Net weight | | kg | 40 | 25 | | | 32 |
| Air flow (Standard) | | m³/min | Hi:18 Me:15 Lo:12 | Hi:12 Me:11 Lo:10 | Hi:14 Me:12 Lo:10 | | Hi:18 Me:15 Lo:12 |
| Air filter, Q'ty | | | Polypropylene net x1 (Washable) | | | | |
| Remote control(option) | | | wired:RC-EX1A, RC-E5, RCH-E3 wireless:RCN-KIT3-E | | | | |
| Installation data Refrigerant piping size | | mm(in) | Liquid line:ø9.52(3/8") Gas line:ø15.88(5/8") | Liquid line:ø6.35(1/4") Gas line:ø9.52(3/8") | Liquid line:ø6.35(1/4") Gas line:ø12.7(1/2") | | Liquid line:ø9.52(3/8") Gas line:ø15.88(5/8") |

1. The data are measured under the following conditions(ISO-T1). Cooling: Indoor temp. of 27°CDB, 19°CWB, and outdoor temp. of 35°CDB. Heating: Indoor temp. of 20°CDB, and outdoor temp. of 7°CDB, 6°CWB.
2. Sound pressure level indicates the value in an anechoic chamber. During operation these values are somewhat higher due to ambient conditions.

# Dimensions

All measurements in mm.

## FDFL

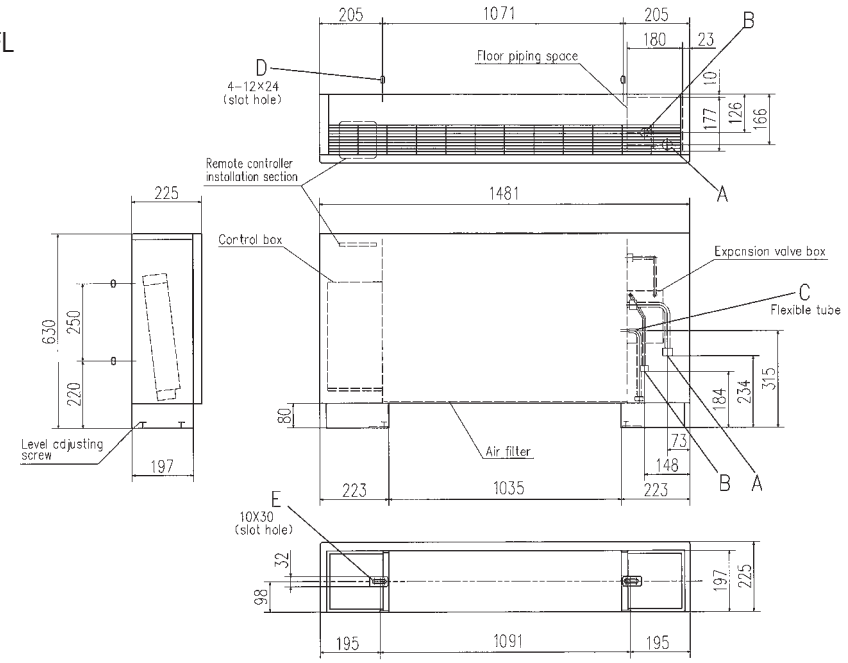


| Symbol | Content | |
|---|---|---|
| | Model | FDFL71KXE6F |
| A | Gas piping (Accessory) | ϕ15.88 (5/8") (Flare) |
| B | Liquid piping | ϕ9.52 (3/8") (Flare) |
| C | Drain piping (Accessory) | PT20A female screw, 360mm |
| D | Slot hole for wall mounting | (M10) |
| E | Metal plate for floor mounting (Accessory) | (M8) |

Note (1) The model name label is attached on the lid of the control box.

Space for installation and service

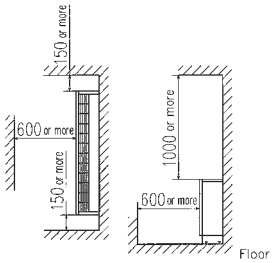


## FDFU

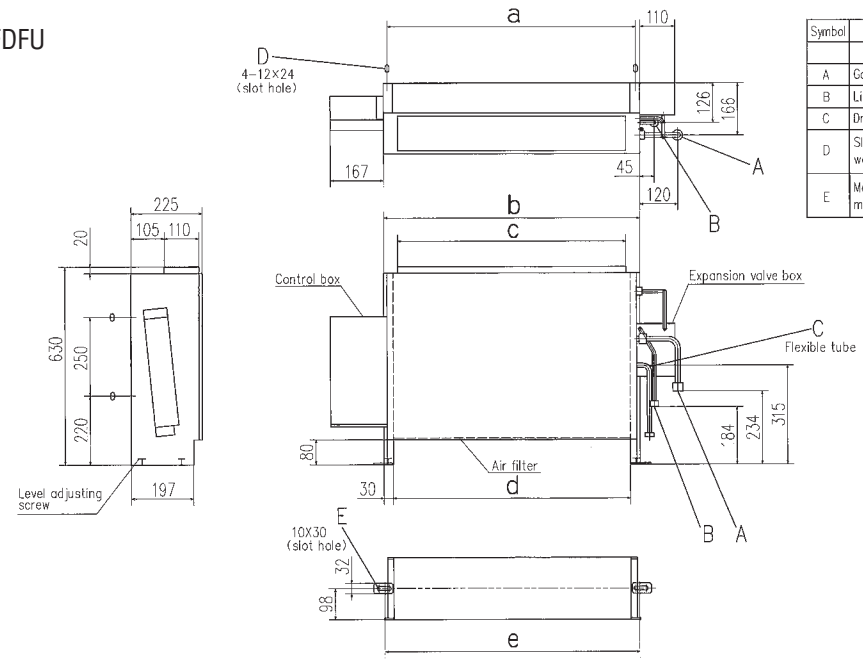


| Symbol | Content | | | |
|---|---|---|---|---|
| | Model | FDFU28KXE6F | FDFU45KXE6F,56KXE6F | FDFU71KXE6F |
| A | Gas piping (Accessory) | ϕ9.52 (3/8") (Flare) | ϕ12.7 (1/2") (Flare) | ϕ15.88 (5/8") (Flare) |
| B | Liquid piping | ϕ6.35 (1/4") (Flare) | | ϕ9.52 (3/8") (Flare) |
| C | Drain piping (Accessory) | PT20A female screw, 360mm | | PT20A female screw, 360mm |
| D | Slot hole for wall mounting | (M10) | | (M10) |
| E | Metal plate for floor mounting (Accessory) | (M8) | | (M8) |

Note (1) The model name label is attached on the lid of the control box.

Space for installation and service

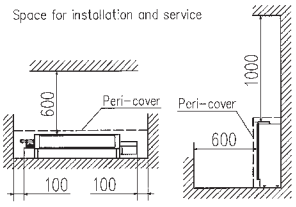


## Dimension Table

Unit:mm

| model | a | b | c | d | e |
|---|---|---|---|---|---|
| FDFU28KXE6F, 45KXE6F, 56KXE6F | 786 | 810 | 722 | 750 | 806 |
| FDFU71KXE6F | 1071 | 1095 | 1007 | 1035 | 1091 |

# Outdoor Air Processing unit
# FDU-F

**Model No.**
FDU650FKXZE1
FDU1100FKXZE1
FDU1800FKXZE1
FDU2400FKXZE1

**Remote control (option)**

Wired

**RC-EX1A** **RC-E5** **RCH-E3**

Wireless

**RCN-KIT3-E**

## Air conditioning and intake of outdoor air are in the same system

Outdoor Air processing unit can be connected in a KXZ system as one of indoor unit series and can create fresh and comfortable air supply together from our high advanced technology.

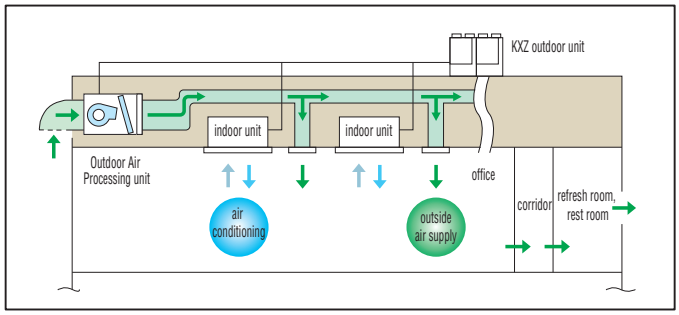


## Compact design

Compact design at just 280(650, 1100), 379(1800, 2400)mm in height, high static pressure of 200Pa and the industry's lowest noise level can meet various kind of installation location for office, refresh room, restroom and kitchen of restaurant etc.

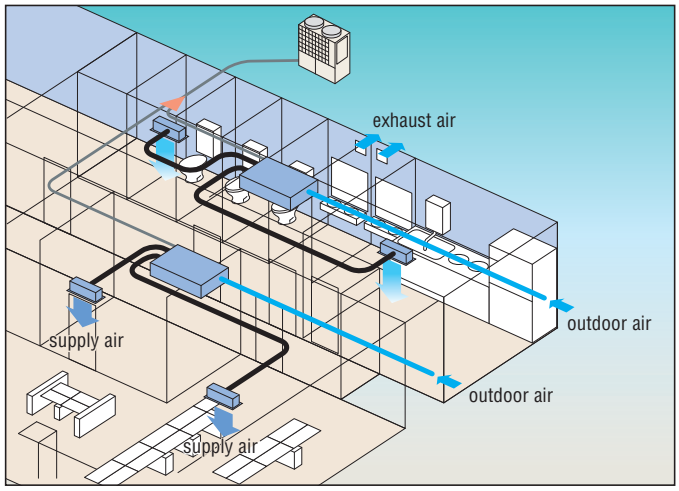


(1) This unit is the specific unit for processing the outdoor air temperature closer to the room temperature. For conditioning the room temperature a dedicated air-conditioner is required additionally.
(2) This unit monitors the outdoor air temperature and controls thermostat ON/OFF at the setting temperature by the remote controller, which indicates the outdoor air temperature for controlling thermostat ON/OFF. When thermostat is turned OFF, the operation is changed to the fan mode so that unprocessed outdoor air will be blown into the room directly. Therefore place the air outlet port or orient the air outlet direction not to blow air directly to persons in the room, especially in the small room such as a restroom and/or sanitary hot water supplying room.
(3) It is strictly prohibited to monitor the room temperature by switching to the thermistor at remote controller side and/or the optional remote thermistor. Otherwise dew formation at air outlet port and/or dew dripping may occur during cooling operation due to the lower outdoor air temperature. Therefore keep the remote controller of this unit in place closer to the administrator so as not to be touched it freely by the end user.
(4) Dehumidifying operation with this unit is prohibited.
(5) When handing over this unit to the end user, make sure to explain sufficiently about the foregoing cautions, the installation place and usage of remote control for this unit and the location of the air outlet.

## Connectivity with Outdoor units

FDU-F series are connectable to 8~60HP outdoor units, not connectable to 4~6HP, KXZ Lite.

## Combination with Outdoor units

| | case | Combination |
|---|---|---|
| A | In case OA processing units only are connected with outdoor units. | The total capacity of FDU-F is 50~100% of outdoor capacity and max quantity of FDU-F is 2 units. |
| B | In case both of OA processing units and dedicated air-conditioner are connected with outdoor units. | The total capacity of FDU-F and dedicated air-conditioners is 50~100% of outdoor capacity and max quantity of FDU-F should be below 30% of outdoor unit capacity. |

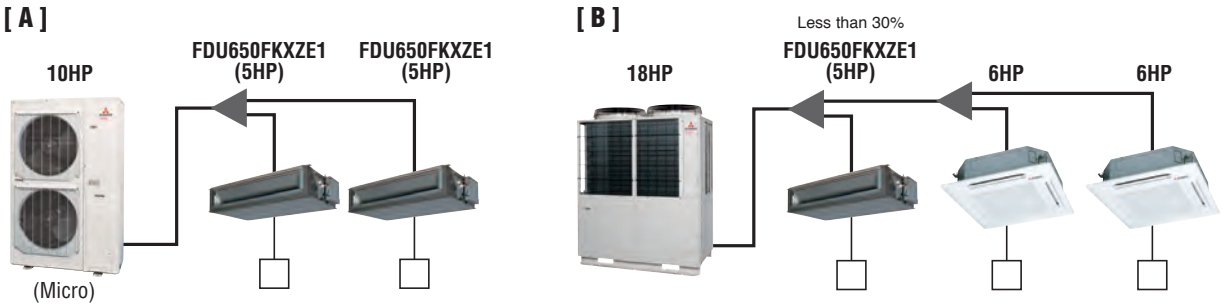


## Concept (Difference between FDU-F and SAF)

SAF is the energy recovery ventilation unit which can recover heat energy from exhaust air to supply air and "has no air processing function, but FDU-F is air processing unit which can treat the supply air closer to room temperature by cooling or heating in connection with KXZ refrigerant system and exhaust air is discharged to outside of the room.

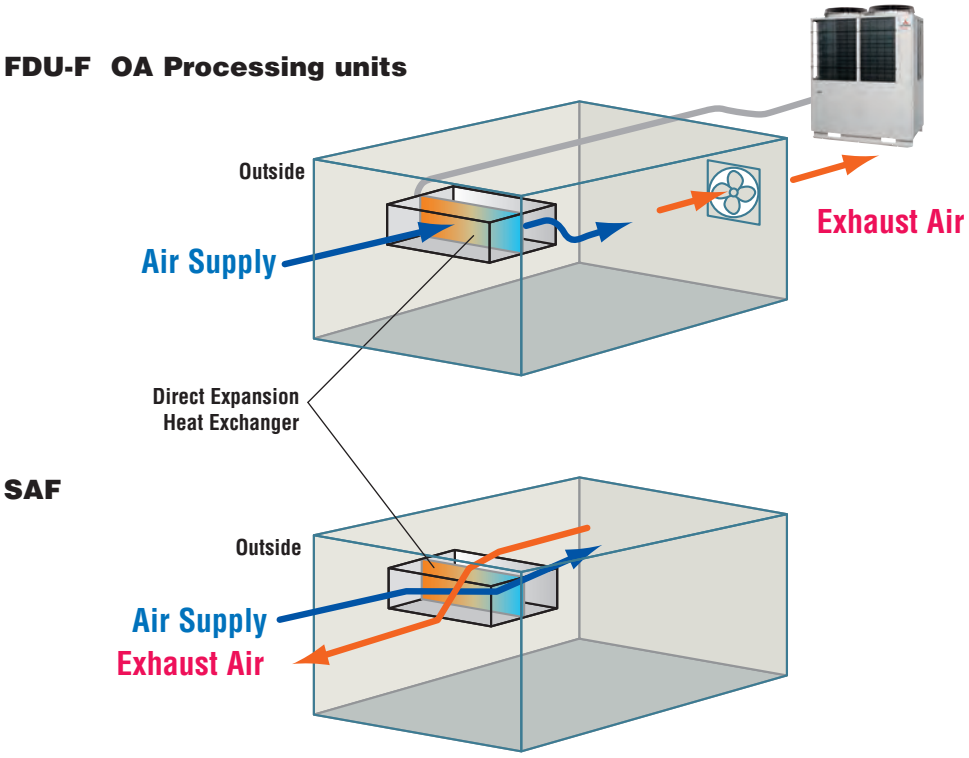

# Specifications

| Item | | Model | FDU650FKXZE1 | FDU1100FKXZE1 | FDU1800FKXZE1 | FDU2400FKXZE1 |
|---|---|---|---|---|---|---|
| Nominal cooling capacity | | kW | 9.0 | 14.0 | 22.4 | 28.0 |
| Nominal heating capacity | | kW | 6.5 | 10.5 | 16.0 | 21.5 |
| Power source | | | 1 Phase 220-240V, 50Hz | | | |
| Power consumption | Cooling | kW | 0.24-0.25 | 0.35-0.36 | 1.16-1.20 | 1.16-1.20 |
| | Heating | | 0.24-0.25 | 0.35-0.36 | 1.16-1.20 | 1.16-1.20 |
| Sound pressure level | | dB(A) | Hi:31 | Hi:37 | Hi:42 | Hi:45 |
| Exterior dimension HxWxD | | mm | 280x950x635 | 280x1370x740 | 379x1600x893 | |
| Net weight | | kg | 34 | 54 | 89 | 89 |
| Air flow (Standard) | | m3/min | Hi:11 | Hi:18 | Hi:30 | Hi:40 |
| External static pressure | | Pa | 200 (at Hi Air flow) | | | |
| Air filter, Q'ty | | | Procure locally | | | |
| Remote control(option) | | | wired:RC-EX1A, RC-E5, RCH-E3 wireless:RCN-KIT3-E | | | |
| Installation data Refrigerating piping size | | mm (in) | Liquid line:ø9.52(3/8") Gas line:ø15.88(5/8") | | Liquid line:ø9.52(3/8") Gas line:ø19.05(3/4") | Liquid line:ø9.52(3/8") Gas line:ø22.22(7/8") |

1. The data are measured at 33ºCDB 28ºCWB (68%RH) during cooling and 0ºCDB-2.9ºCWB (50%RH) during heating (no frost).
2. Temperature range of outdoor air must be 20~40ºCDB (32ºCWB) during cooling and 0~24ºCDB during heating.
3. Sound level indicates the value in an anechoic chamber. During operation these value are somewhat higher due to ambient conditions.
4. The factory E.S.P. setting is set within the range of 10 - 120Pa.If SW8-4 is turned to "ON", E.S.P. setting range can be changed to 10 - 200 Pa. (with RC-EX1A and RC-E5 only)

# Dimensions

All measurements in mm.

FDU650FKXZE1

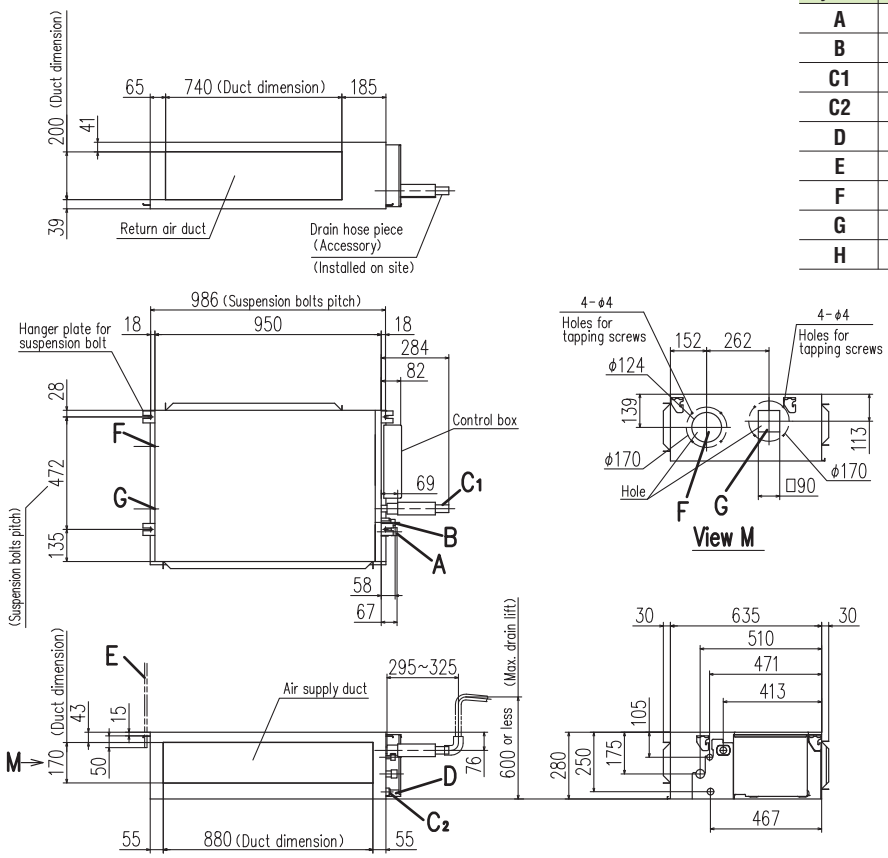


| Symbol | Content | |
|---|---|---|
| A | Gas piping | ø15.88 (5/8") (Flare) |
| B | Liquid piping | ø9.52 (3/8") (Flare) |
| C1 | Drain piping | VP25(O.D.32) |
| C2 | Drain piping(Gravity drainage) | V20(O.D.26) |
| D | Hole for wiring | |
| E | Suspension bolts | M10 |
| F | Outside air opening for ducting | (Knock out) |
| G | Air outlet opening for ducting | (Knock out) |
| H | Inspection hole | (450X450) |

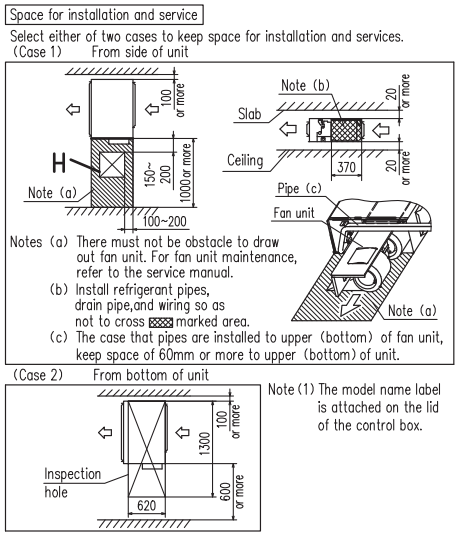


Note (1) The model name label is attached on the lid of the control box.

## FDU1100FKXZE1

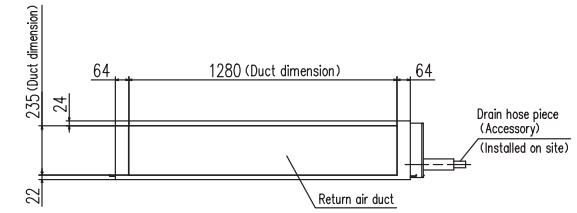


| Symbol | Content | |
|---|---|---|
| A | Gas piping | ø15.88 (5/8") (Flare) |
| B | Liquid piping | ø9.52 (3/8") (Flare) |
| C1 | Drain piping | VP25(O.D.32) |
| C2 | Drain piping(Gravity drainage) | V20(O.D.26) |
| D | Hole for wiring | |
| E | Suspension bolts | M10 |
| F | Outside air opening for ducting | (Knock out) |
| G | Air outlet opening for ducting | (Knock out) |
| H | Inspection hole | (450X450) |

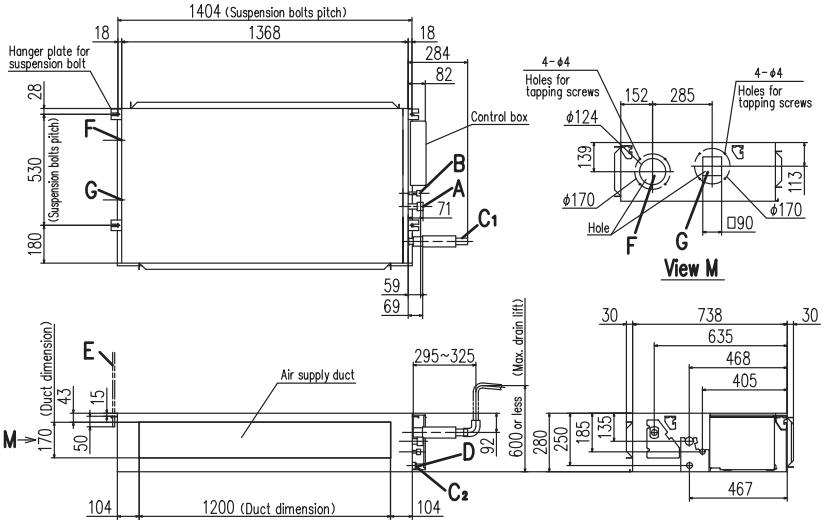


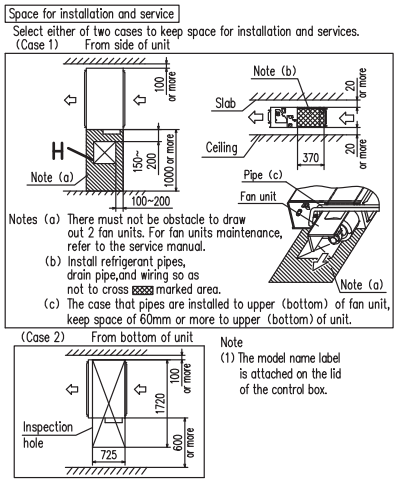


## FDU1800FKXZE1, FDU2400FKXZE1

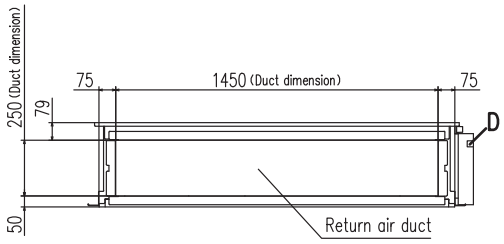


| Symbol | Content | | |
|---|---|---|---|
| | MODEL | 1800 | 2400 |
| A | Gas piping | ø19.05 (3/4") | ø22.22 (7/8") |
| B | Liquid piping | ø9.52 (3/8") (Brazing) | |
| C | Drain piping(Gravity drainage) | VP25(O.D.32) | |
| D | Hole for wiring | | |
| E | Suspension bolts | M10 | |
| F | Inspection hole | (450X450) | |

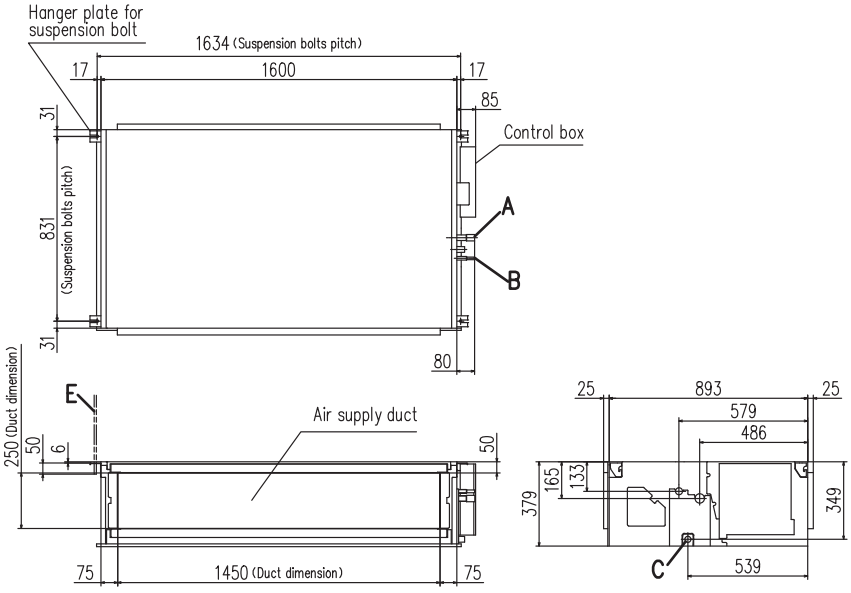


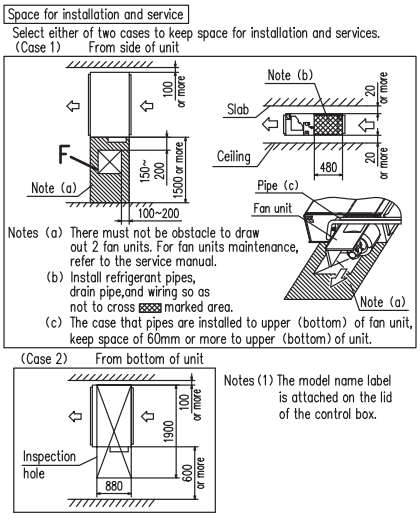

# Fresh Air Ventilation and Heat Exchange unit SAF-E6

**Model No.**

SAF150E6
SAF250E6
SAF350E6
SAF500E6
SAF800E6
SAF1000E6

## Energy Performance of Building Directive - EPBD

EPBD limit the amount of electrical/gas power to be used to provide heating or cooling in commercial buildings. Therefore the building designer needs to select energy efficient heating/cooling equipment, and to minimise energy losses through ventilation systems.

The SAF recovers heat energy which would otherwise be exhausted to atmosphere, and uses this energy to warm the air entering the building. The reverse happens in warmer climates, where the exhausted cool air is used to partially cool the incoming air.

Capturing this waste energy, means the heating/ cooling requirements of the building are reduced, so smaller size plant can be selected, savings can be made in long term energy consumption, and carbon emissions are reduced.

**Increased external static pressure at UHi air flow**

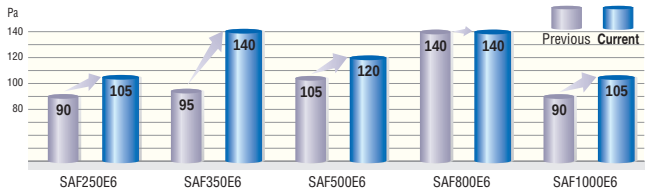


# Specifications

| Item | | | | Model | SAF150E6 | SAF250E6 | SAF350E6 | SAF500E6 | SAF800E6 | SAF1000E6 |
|---|---|---|---|---|---|---|---|---|---|---|
| Power source | | | | | 1 Phase 220-240V, 50Hz | | | | | |
| Exterior dimensions Height x Width x Depth | | | | mm | 270x970x467 | 270x882x599 | 317x1050x804 | 317x1090x904 | 388x1322x884 | 388x1322x1134 |
| Exterior appearance | | | | | Galvanized steel sheet | | | | | |
| Power input | | | | W | 92-107 | 108-123 | 178-185 | 204-225 | 360-378 | 416-432 |
| Running current | | | | A | 0.42-0.45 | 0.49-0.51 | 0.81-0.77 | 0.93-0.94 | 1.64-1.58 | 1.89-1.80 |
| Capacity | UHi | Enthalpy exchange efficiency | Cooling | % | 63 | 63 | 66 | 62 | 65 | 65 |
| | | | Heating | | 70 | 70 | 69 | 67 | 71 | 71 |
| | | Temperature exchange efficiency | | | 75 | | | | | |
| | Hi | Enthalpy exchange efficiency | Cooling | | 63 | 63 | 66 | 62 | 65 | 65 |
| | | | Heating | | 70 | 70 | 69 | 67 | 71 | 71 |
| | | Temperature exchange efficiency | | | 75 | | | | | |
| | Lo | Enthalpy exchange efficiency | Cooling | | 66 | 65 | 71 | 64 | 68 | 70 |
| | | | Heating | | 73 | 72 | 73 | 69 | 74 | 76 |
| | | Temperature exchange efficiency | | | 77 | 77 | 78 | 76 | 76 | 79 |
| Motor & Q'ty | | | | W | 20 x 2 | 20 x 2 | 40 x 2 | 70 x 2 | 180 x 2 | 180 x 2 |
| Air handling equipment Fan type & Q'ty | | | | | Sirocco fan x 2 | | | | | |
| Air flow | | | UHi | $m^3/h$ | 150 | 250 | 350 | 500 | 800 | 1000 |
| | | | Hi | | 150 | 250 | 350 | 500 | 800 | 1000 |
| | | | Lo | | 120 | 190 | 240 | 440 | 630 | 700 |
| External static pressure | | | UHi | Pa | 80 | 105 | 140 | 120 | 140 | 105 |
| | | | Hi | | 70 | 95 | 60 | 60 | 110 | 80 |
| | | | Lo | | 25 | 45 | 45 | 35 | 55 | 75 |
| Net weight | | | | kg | 25 | 29 | 49 | 57 | 71 | 83 |
| Remote control | | | | | Included | | | | | |
| Air filter | Supply air | | | | Protection for element (Washable) PS400 | | | | | |
| | Exhaust air | | | | | | | | | |

Structure (SAF800E6)

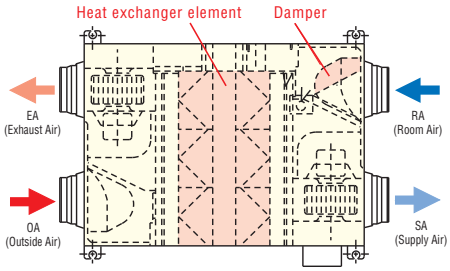


Principle of operation (simple ventilation)

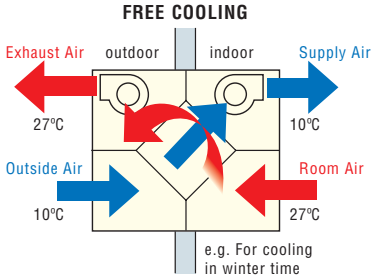


Principle of operation (heat exchanging)

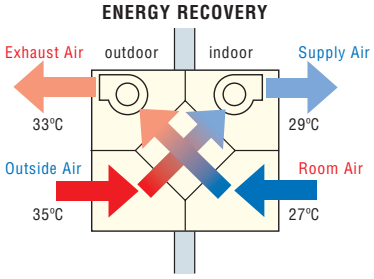


# Dimensions

All measurements in mm.

## SAF150E6, SAF250E6, SAF350E6, SAF500E6

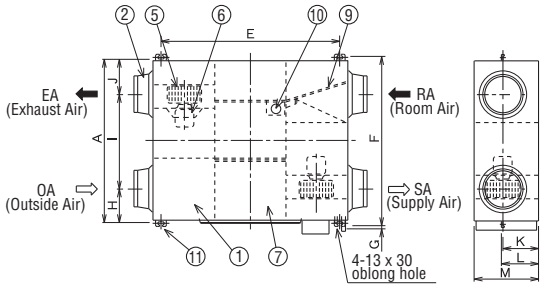


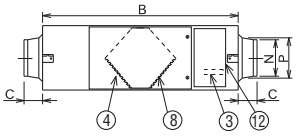

Applied duct

| Model No. | Nominal diameter |
|---|---|
| SAF150E6 | ø100 |
| SAF250E6 | ø150 |
| SAF350E6 | |
| SAF500E6 | ø200 |

### Dimension table

Unit:mm

| Model | A | B | C | E | F | G | H | I | J | K | L | M | N | P |
|---|---|---|---|---|---|---|---|---|---|---|---|---|---|---|
| SAF150E6 | 467 | 970 | 49 | 810 | 525 | 19 | 82 | 303 | 82 | 135 | 159 | 270 | ø98 | ø110 |
| SAF250E6 | 599 | 882 | 95 | | 655 | | 142 | 315 | 142 | | | | ø144 | ø164 |
| SAF350E6 | 804 | 1050 | 70 | 978 | 860 | | 112 | 580 | 112 | 159 | 182 | 317 | | ø162 |
| SAF500E6 | 904 | 1090 | | 1018 | 960 | | 132 | 640 | 132 | | | | ø194 | ø210 |

## SAF800E6, SAF1000E6

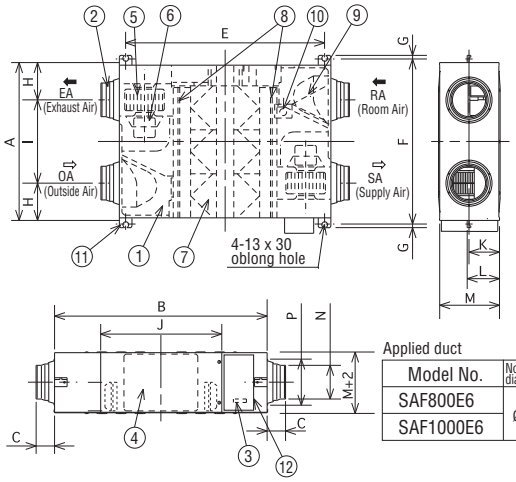


Applied duct

| Model No. | Nominal diameter |
|---|---|
| SAF800E6 | ø250 |
| SAF1000E6 | |

### Dimension table

Unit:mm

| Model | A | B | C | E | F | G | H | I | J | K | L | M | N | P |
|---|---|---|---|---|---|---|---|---|---|---|---|---|---|---|
| SAF800E6 | 884 | 1322 | 85 | 1250 | 940 | 19 | 228 | 428 | 612 | 194 | 218 | 388 | ø242 | ø258 |
| SAF1000E6 | 1134 | | | | 1190 | | | 678 | | | | | | |

| NO. | Name | Qt'y |
|---|---|---|
| ① | Frame | 1 |
| ② | Adaptor | 4 |
| ③ | Terminal board | 1 |
| ④ | Inspection Cover | 1 |
| ⑤ | Fan | 2 ※ |
| ⑥ | Motor | 2 ※ |
| ⑦ | Heat Exchange Element<br>SAF150E6<br>SAF250E6<br>SAF350E6<br>SAF500E6<br>SAF800E6<br>SAF1000E6 | <br>1<br>1<br>2<br>2<br>3<br>4 |
| ⑧ | Filter | 2 |
| ⑨ | Damper | 1 |
| ⑩ | Damper Motor | 1 |
| ⑪ | Suspension fitting | 4 |
| ⑫ | Electrical components box | 1 |

※Model SAF350E6, SAF500E6 have different fan and motor locations.

### Installation reference

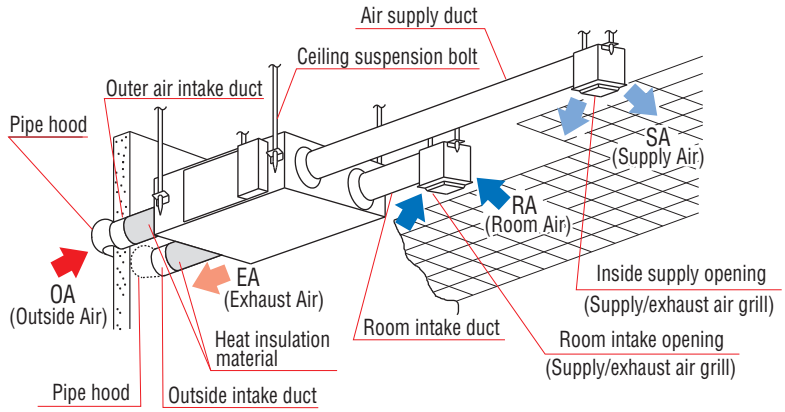


Note:An inspection port is needed for cleaning the heat exchanger and filter 1 or 2 times a year.

# Fresh Air DX Assembly

**Model No.**
SAF-DX250E6
SAF-DX350E6
SAF-DX500E6
SAF-DX800E6
SAF-DX1000E6

**Drain up kit (option, built-in type)**
(600mm)

**DXA-DU-E**

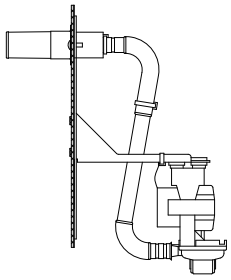

**Remote control (option)**

Wired

**RC-E5** **RCH-E3**

Wireless

**RCN-KIT3-E**

- SAF-DX is a heating or cooling coil incorporating MHI KXZ series controls. It can be used in combination with our SAF series of total heat exchanger.
- Combination of SAF-DX together with other indoor units is possible. The capacity code index of each model is shown below and must be used when making the system selection. Total capacity code index must be within 100% of outdoor unit capacity code index.
- Remote control option is the same as with other indoor units (see above). Connection to all Superlink controls is also possible.
- Optional condensate lift mechanism is also available (600mm height).
- Return air temp. control or supply air temp. control can be selectable.

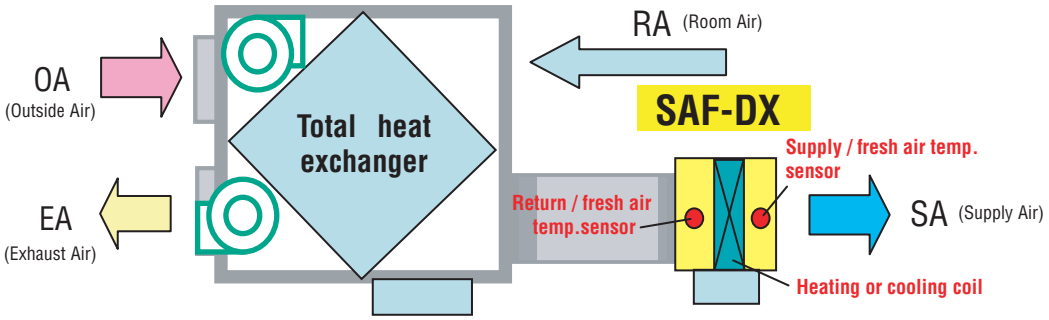


SAF-DX can provide heating or cooling to the fresh air supplied through a 3rd party air handling unit or total heat exchanger such as our SAF series.

# Specifications

| Item | | Model | SAF-DX250E6 | SAF-DX350E6 | SAF-DX500E6 | SAF-DX800E6 | SAF-DX1000E6 |
|---|---|---|---|---|---|---|---|
| Nominal cooling capacity *1 | | kW | 2.0 | 2.8 | 3.6 | 5.6 | 6.3 |
| Nominal heating capacity *2 | | kW | 1.8 | 2.2 | 2.8 | 4.5 | 5.6 |
| Capacity code | | | 22 | 28 | 36 | 56 | 71 |
| Power source | | | 1 Phase 220-240V, 50Hz | | | | |
| Power consumption | Cooling | W | 7.2-7.2 | | | | |
| | Heating | | 7.2-7.2 | | | | |
| Running current | Cooling | A | 0.05-0.05 | | | | |
| | Heating | | 0.05-0.05 | | | | |
| Exterior dimensions H x W x D | | mm | 315 x 452 x 422 | | 315 x 537 x 422 | 315 x 682 x 422 | 315 x 822 x 422 |
| Net weight | | kg | 12.3 | | 13.6 | 16.1 | 18.4 |
| Air flow (Standard) | | $m^3/h$ | 250 | 350 | 500 | 800 | 1000 |
| Internal resistance | | Pa | 38 | 66 | | | |
| Remote control(option) | | | wired: RC-E5, RCH-E3 wireless: RCN-KIT3-E | | | | |
| Installation data Refrigerant piping size | | mm(in) | Liquid line:ø6.35(1/4") Gas line:ø9.52(3/8") | | Liquid line:ø6.35(1/4") Gas line:ø12.7(1/2") | | Liquid line:ø9.52(3/8") Gas line:ø15.88(5/8") |

(1) The data are measured at the following conditions.

| Item | Return/fresh air temperature | | Outdoor air temperature | | Standards |
|---|---|---|---|---|---|
| Operation | DB | WB | DB | WB | |
| Cooling*1 | 27°C | 19°C | 35°C | 24°C | ISO-T1 |
| Heating*2 | 20°C | | 7°C | 6°C | |

(2) This air-conditioner is manufactured and tested in conformity with ISO-T1 "UNITARY AIR-CONDITIONERS".

# Dimensions

All measurements in mm.

## SAF-DX250E6,350E6

| Symbol | Content | |
|---|---|---|
| A | Gas piping | ø9.52 (3/8") (Flare) |
| B | Liquid piping | ø6.35 (1/4") (Flare) |
| C | Drain piping | R1 |
| D | Hole for power source line | |
| E | Wiring hole for total enthalpy heat exchanger | |
| F | Hole for communication line | |
| G | Suspension bolts | M10 |

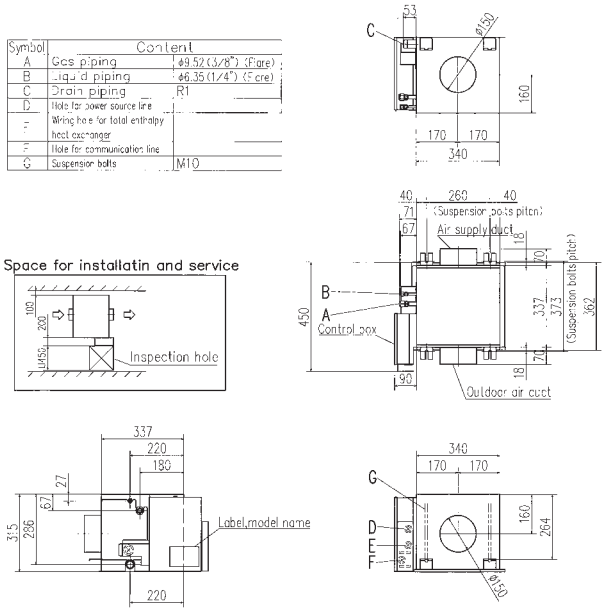


## SAF-DX500E6

| Symbol | Content | |
|---|---|---|
| A | Gas piping | ø12.7 (1/2") (Flare) |
| B | Liquid piping | ø6.35 (1/4") (Flare) |
| C | Drain piping | R1 |
| D | Hole for power source line | |
| E | Wiring hole for total enthalpy heat exchanger | |
| F | Hole for communication line | |
| G | Suspension bolts | M10 |

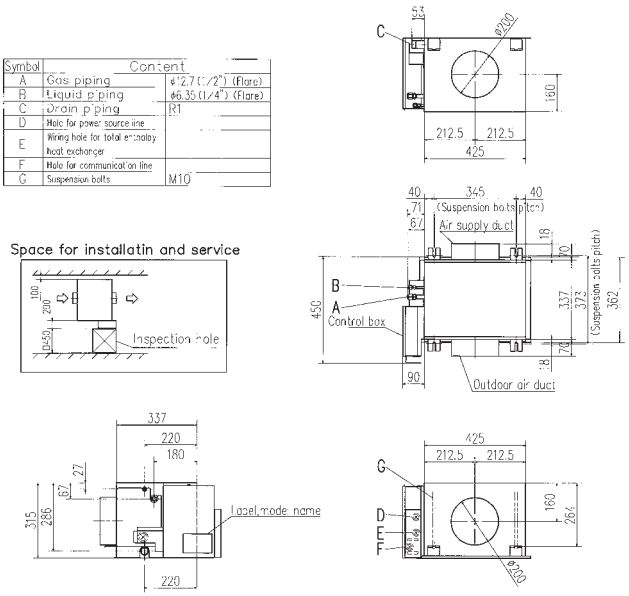


## SAF-DX800E6

| Symbol | Content | |
|---|---|---|
| A | Gas piping | ø12.7 (1/2") (Flare) |
| B | Liquid piping | ø6.35 (1/4") (Flare) |
| C | Drain piping | R1 |
| D | Hole for power source line | |
| E | Wiring hole for total enthalpy heat exchanger | |
| F | Hole for communication line | |
| G | Suspension bolts | M10 |

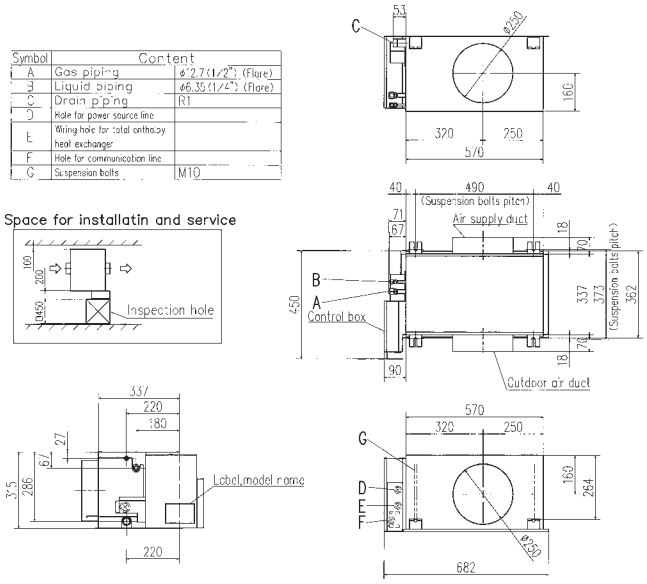


## SAF-DX1000E6

| Symbol | Content | |
|---|---|---|
| A | Gas piping | ø15.88 (5/8") (Flare) |
| B | Liquid piping | ø9.52 (3/8") (Flare) |
| C | Drain piping | R1 |
| D | Hole for power source line | |
| E | Wiring hole for total enthalpy heat exchanger | |
| F | Hole for communication line | |
| G | Suspension bolts | M10 |

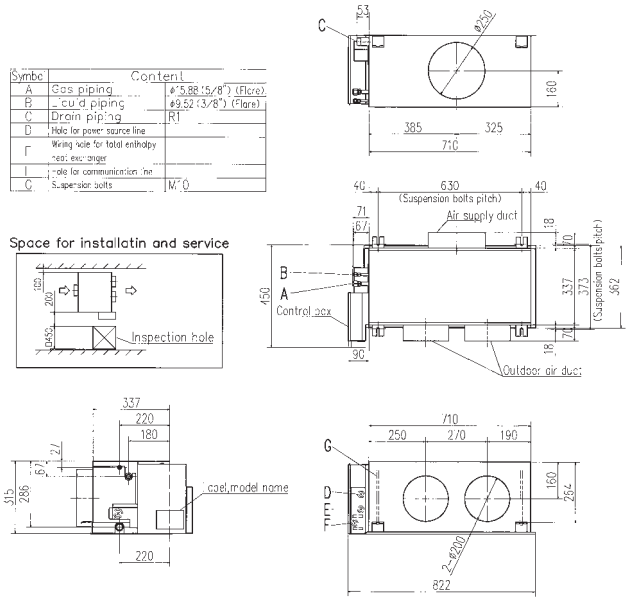

# EEV-KIT

- EEV-KIT is the control kit for operating the locally provided AHU or FCU with direct expansion heat exchanger coils in connection with the KXZ / KXE6 system.
  (AHU : Air Handling Unit, FCU : Fan Coil Unit)
- EEV-KIT is composed of one EEV-Control ASSY and one EEV-Set.

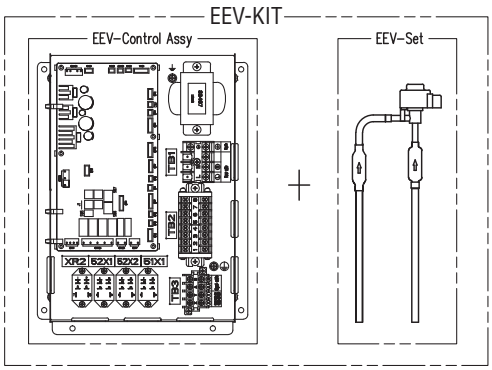


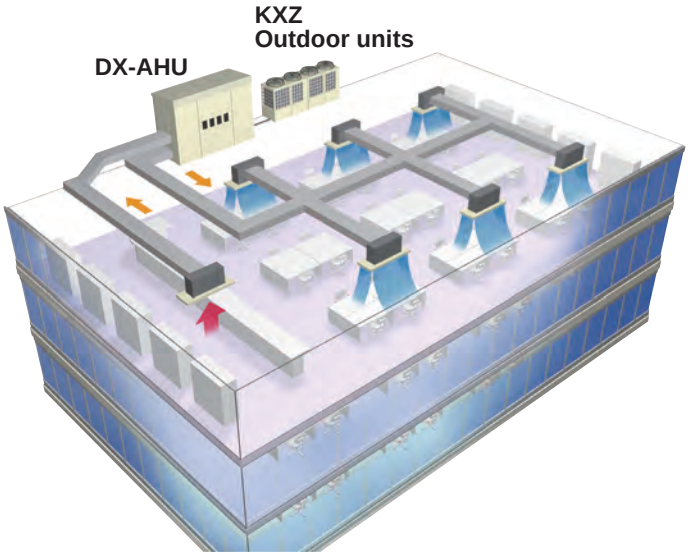


DX : Direct expansion coil

# Features

EEV-Control Assy has 2 types.

| Refrigeration system | EEV-Control Assy | |
|---|---|---|
| | EEVKIT6-E-M | EEVKIT6-E-C |
| Single | Not Use | 1 box-Many boxes |
| Multiple | 1 box (for master) | Many boxes(for slave) |

EEV-Set Select from following 3 types according to the coil capacity.

| Type | EEV6-71-E | EEV6-160-E | EEV6-280-E |
|---|---|---|---|
| Capacity | 22-71 | 90-160 | 224-280 |

## System configuration

- Single refrigeration system EEVKIT6-E-C ··· Possible with multiple
- Multiple refrigeration system EEVKIT6-E-M (1) + EEVKIT6-E-C ··· Possible with multiple (Max32)
- EEVKIT6-E-C is common for both single and multiple refrigeration systems

## Single refrigerant system

- Single refrigeration system is one that can have multiple outdoor units on one refrigerant pipe work circuit.
- There are 2 types of EEV-KIT systems that can be built into the single refrigeration system.
- System A : one EEV-KIT.
- System B : multiple EEV-KIT's.

### System A

- This system has only one set of EEV-KIT built into one indoor unit with only one heat exchanger. This system can be applied to an indoor unit whose capacity is up to 10HP.

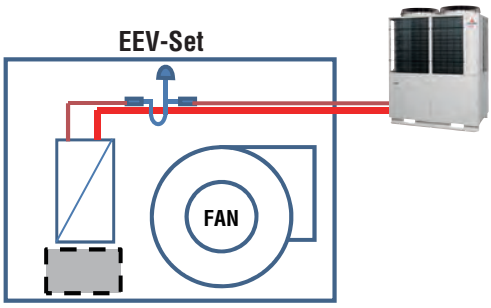


### System B

- System B is a system that has multiple EEV-KIT's built into one indoor unit with multiple heat exchangers on one refrigerant circuit.
- This system can be applied up to 60HP(for KXZ), 48HP(for KXE6) AHU capacity.

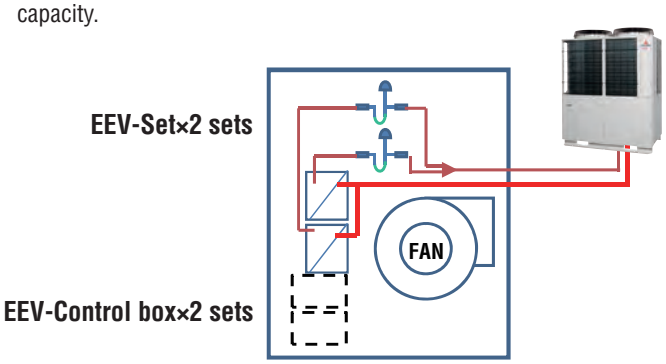

# Multiple refrigerant system

Multiple refrigeration system is an AHU system with
1) Multiple independent refrigerant circuits
2) One master control to control the whole system.

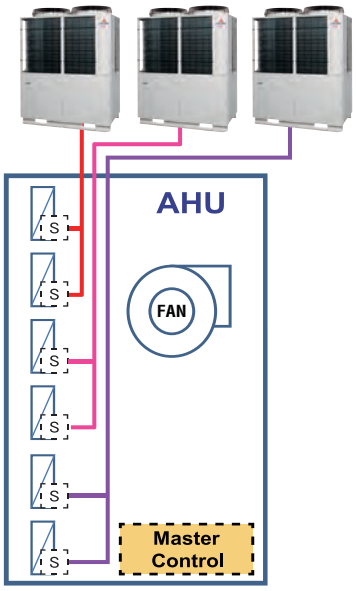


## Advantage

- Large systems are possible [max capacity 896kW (Indoor unit : 28kW x 32)]
- External control
- Capacity step control

## Additional parts over a single refrigeration system

- One master control

The slave EEV control and EEV set are the same as a single refrigeration system.

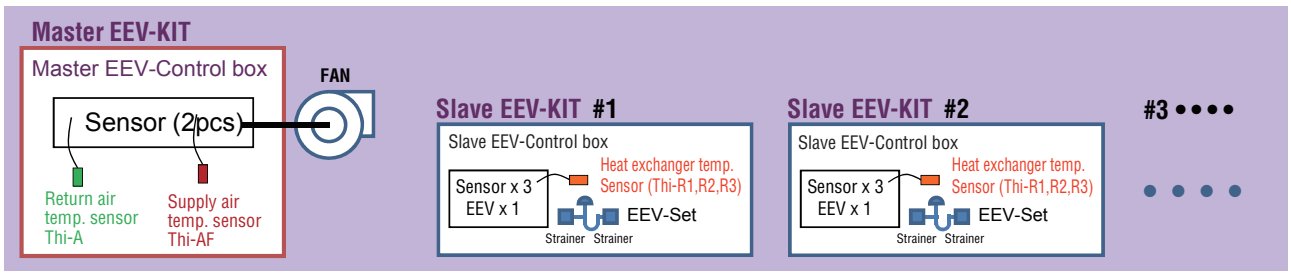


# Connection to SUPERLINK II

## Single refrigeration system

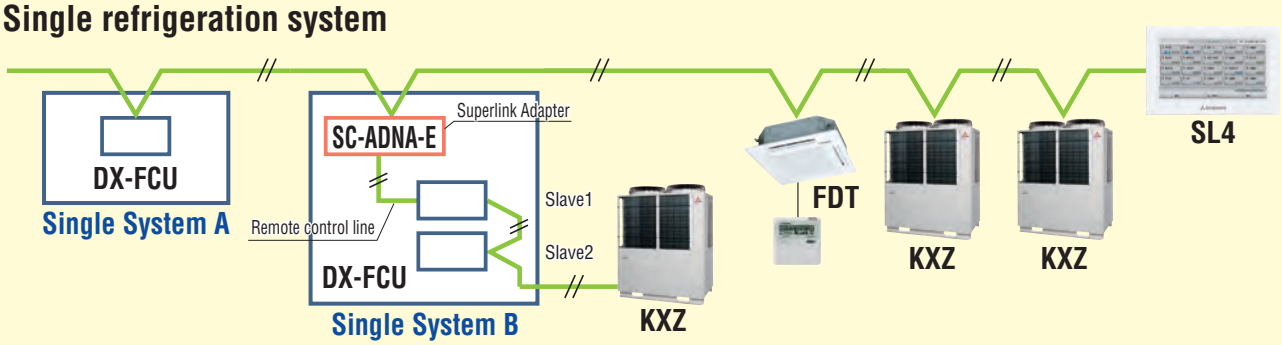


## Multiple refrigeration system

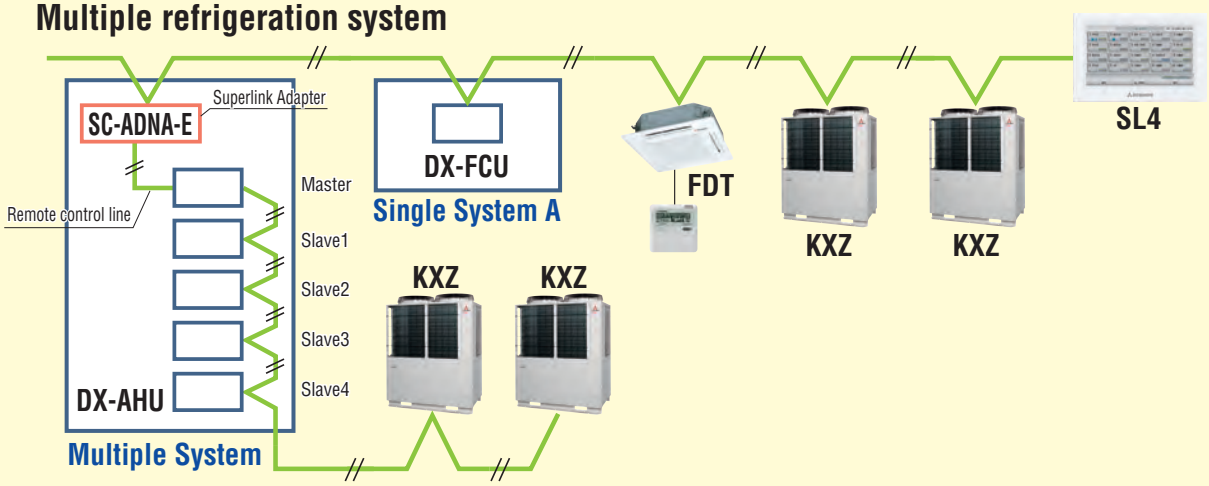

# *Simple setting REMOTE CONTROL*

**Advanced touch screen panel with full dot Liquid Crystal display**

### User friendly

- LCD panel with light tap operation introduced as the industry's first
- Simple interface with only three buttons

### High level of visibility

- Big LCD with 3.8 inch full dot display
- Back light function
- Multi language display (9 languages)

**RC-EX1A**

**Run / Stop**

## High power operation

The highest capacity operation (Max 15 minutes)

- Increasing compressor speed
- Increasing air flow volume

## Energy-saving operation

- Changes set temperature. At 28°C in cooling mode and 22°C in heating mode, 25°C in auto mode.
- Operation correction by outdoor temperature

**Simple setting by tapping button only**

# 1. Basic operation

## All settings done by tapping touch screen panel

### Operation mode

Cooling
Fan
Dry
Heating
Auto

### Operation mode setting screen

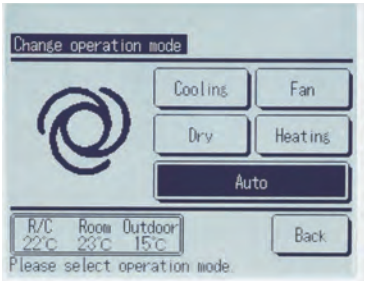


The desired operation mode can be selected by simply tapping this button.

### Setting temperature screen

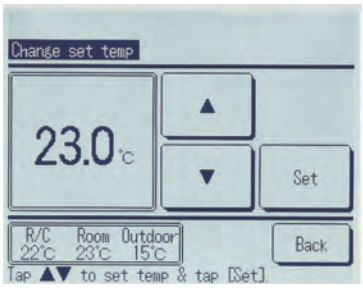


You can select the temperature as desired by tapping ▲▼ button.

# 2. Main functions

## Saving energy

Sleep timer
Peak cut timer
Automatic temperature set back
Weekly timer
Set ON/OFF timer by hour
Set ON/OFF timer by clock

## Comfort

Individual flap control
High power operation
External ventilation ON/OFF
Warming up operation
Automatic fan speed
Temperature increment setting by 0.5°C

## Convenience

LCD contrast setting
Back light setting
Filter sign
Control sound
Outdoor silent mode
Summer time setting
Home leave mode
Indoor & outdoor temperature display
Heating standby display
Defrosting operation display
Auto cooling/heating display
°C/°F display
Administrator settings
Room name setting

## Service

Error code display
Operation data display
Next service date display
Contact company display
USB connection (mini-B)

## Remote control RC-EX1A Series Utility Software

By connecting this system to the Remote Control, the Remote Control can be operated from PC.

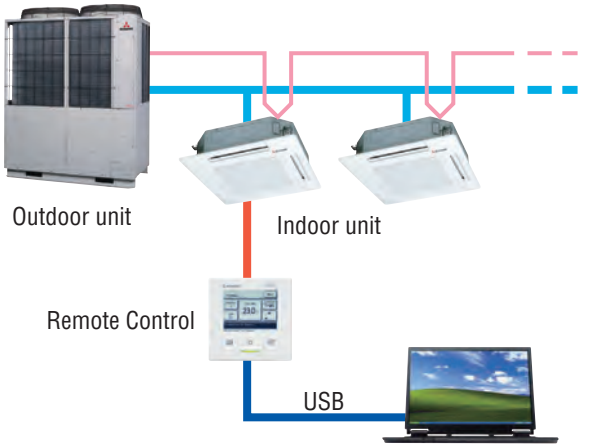

# Control Systems
# <Individual control>

## Remote Control line up (except SAF)

| | indoor unit | remote control |
|---|---|---|
| wired | all models | RC-EX1A |
| | | RC-E5 |
| | | RCH-E3 |

| | indoor unit | remote control | indoor unit | remote control | indoor unit | remote control |
|---|---|---|---|---|---|---|
| wireless | FDT | RCN-T-36W-E | FDTS | RCN-TS-E | FDE | RCN-E-E |
| | FDTC | RCN-TC-24W-ER | FDK22~56 | RCN-K-E | FDFW | RCN-FW-E |
| | FDTW | RCN-TW-E | FDK71 | RCN-K71-E | others* | RCN-KIT3-E |

*FDTQ, FDU, FDUM, FDUT, FDUH, FDU-F

## Wired remote control (option)

### RC-E5

The RC-E5 controller enables extensive access to service and maintenance technical data combined with easy to use functions and a clear LCD display.

**Weekly timer function as standard**

RC-E5 provides (as a standard feature) a weekly timer, which allows one-week operation schedules to be registered. A user can specify up to four times a day to start/stop the air conditioner. (Temperature setting is also possible with the timer).

**Timer operation**

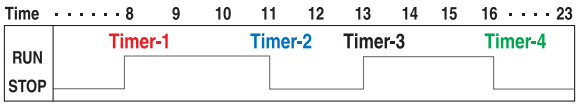


**Run hour meters to facilitate maintenance checking**

RC-E5 stores operation data when an anomaly occurs and indicates the error on the LCD. It also displays cumulative operation hours of the air conditioner and compressor since commissioning.

**Room temperature controlled by the remote control sensor**

The temperature sensor is housed in the top section of the remote control unit. This arrangement has improved the sensitivity of the remote control unit's sensor, which permits more finely controlled air conditioning.

**Changeable set temperature ranges**

RC-E5 allows the upper and lower limits of a set temperature range to be specified separately.
By adjusting a set temperature range, you can ensure energy saving air conditioning by avoiding excessive cooling or heating.

| | Changeable range |
|---|---|
| Upper limit | 20~30°C(effective for heating operation) |
| Lower limit | 18~26°C(effective for non-heating operation) |

## Simple remote control (option)

### RCH-E3 (wired)

Considering specialized usage in hotel rooms, control buttons are limited only to minimum required functions such as ON/OFF, mode, temperature setting and fan speed. It is really simple and easy to use.

**Up to 16 units**

It can control up to 16 units individually, with pressing the AIR CON No. button.

**AUTO restart**

This function allows starting the air conditioner automatically when power supply is restored after power failure or by turning on the power switch.

*RCH-E3 is not applicable to the Individual flap control system and the Flap control system.
*When RCH-E3 is used, the fan speed setting can only be set to 3 speed settings (Hi-Me-Lo).

## Thermistor (option)

### SC-THB-E3

In case sensor in the indoor units or the remote control sensor can not sense the room temperature correctly, or individual remote control in each room is not required but only sensor is required (as when center control system is in place), install SC-THB-E3 at proper place in the rooms.

8m

## Wireless remote control (option)

For wireless control simply insert the infra-red receiver kit on a corner of the panel

**RCN-T-36W-E, RCN-TC-24W-ER**

**RCN-TW-E**

**RCN-TS-E**

**RCN-K-E, RCN-K71-E**

**RCN-E-E**

**RCN-FW-E**

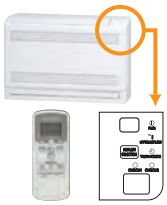

**RCN-KIT3-E**

*The wireless remote control is not applicable to the Individual flap control system and the flap control system.
*When the wireless remote control is used, the fan speed setting can only be set to 3 speed settings (Hi-Me-Lo).

# <Control System>
## SUPERLINK-Ⅱ

MHI has now combined simplicity of installation with our highly sophisticated Superlink-Ⅱ control system, to offer building owners and occupiers a comprehensive control and management system, while providing complete commissioning and service maintenance assistance for installers and service engineers. The Superlink-Ⅱ network utilises two wire, non-polar cable - for further details of wiring.

Superlink-Ⅱ is an advanced high speed data transmission system that can connect up to 128 indoor units and 32 outdoor units as a network. MHI offers a wide range of control options for the Superlink-Ⅱ network to suit any application large or small, as well as connection to new or existing building management systems. Individual MHI split systems can also be integrated on to the Superlink-Ⅱ network using SC-ADNA-E.

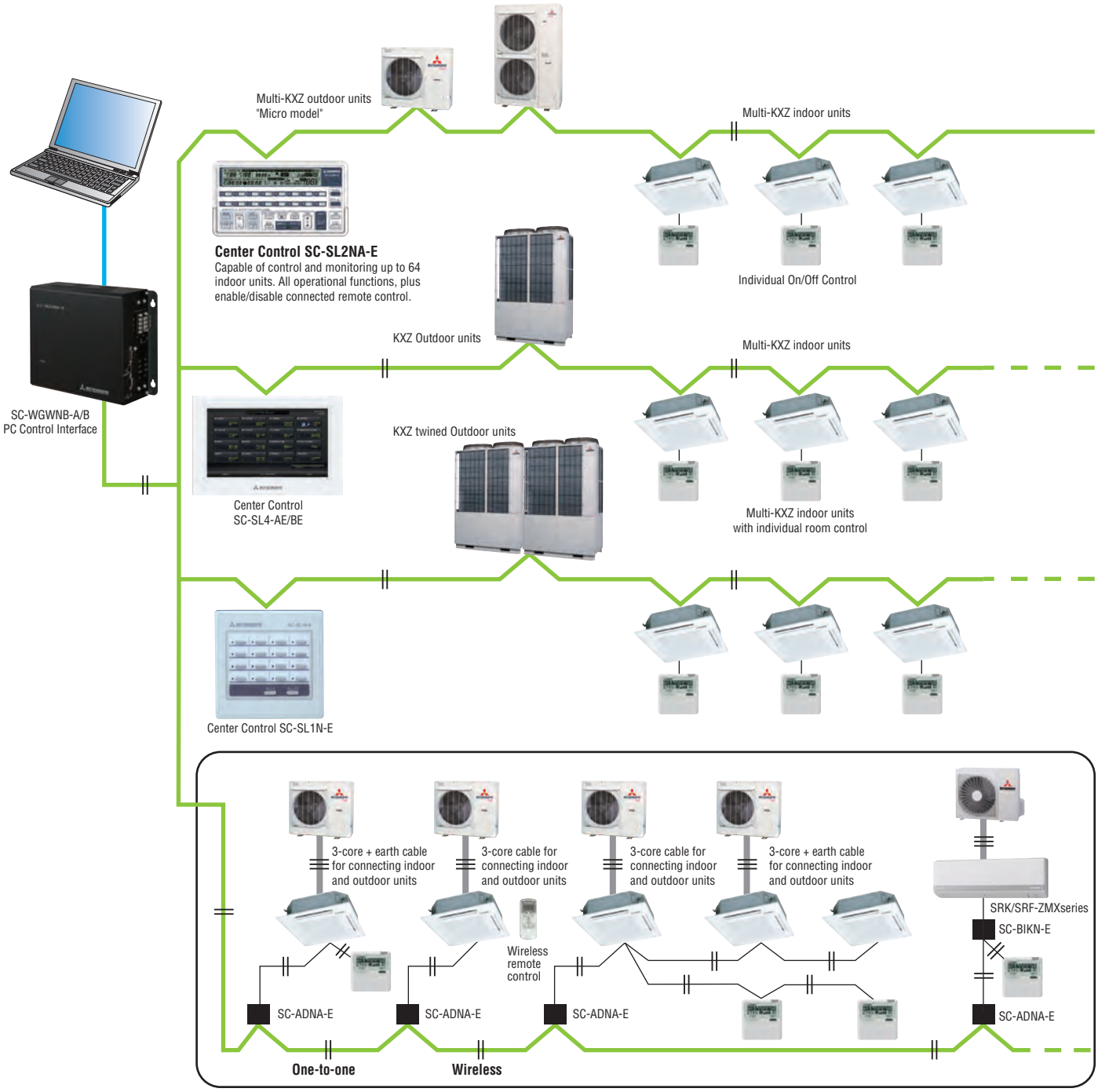

# <Central Control>
# SC-SL4-AE/BE

MHI introduces the full colour touch screen central control SC-SL4-AE/BE, with 9 inch interactive LCD display. Offers control, monitoring, scheduling and service/maintenance functions for up to 128 indoor units. Control with PC is available by use of internet explorer.

Indoor units can be controlled, scheduled, monitored and either individually, as groups or as blocks of groups with the following functions:

| Control | Monitoring | Scheduling | Administration/Service |
|---|---|---|---|
| Run/Stop / Home leave | Operating state | Yearly schedule | Block definition, Floor layout |
| Mode (cool/heat/fan/dry/Auto) | Mode | Today's schedule | Group definition |
| Set temperature | Set temperature | Detailed daily schedule | Unit definition |
| Operation permitted/prohibited | Room temperature | Season setting | Time and date setting |
| Fan speeds | Operation permitted/ prohibited | | Alarm history |
| Air direction | Fan speed | | Energy consumption calculation period |
| Filter sign reset | Air direction | | Energy consumption, cumulative operation time |
| Demand control (3 steps) | Filter sign | | Flap control setting |
| Emergency stop | Maintenance (1, 2 or back-up)<br>Outdoor air temperature | | Operation data monitoring<br>Data logging (Run / Stop set temperature , room temperature , outdoor air temperature ) |

**System diagram**
Indoor unit 128 units

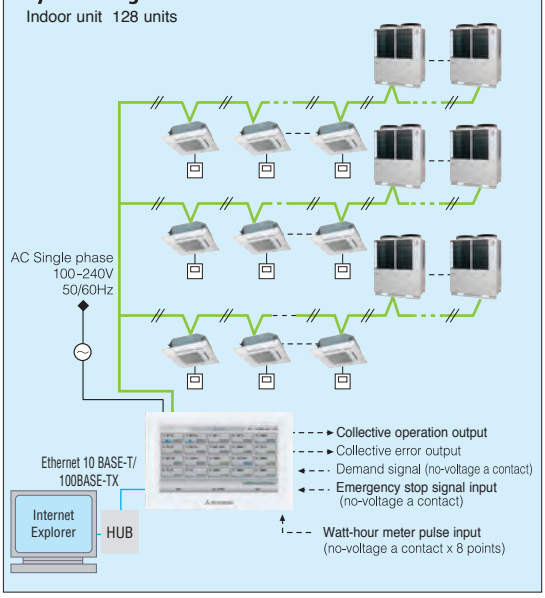


PC requirements: Windows Vista or Windows 7, 8.1
Monitor resolution 1280 x 1024 or more.
Web browser requirements: Internet Explorer 9, 11

## Schedule setting

**For each group**
Schedule settings for each group are possible. The RUN/STOP/HOME LEAVE time, operation mode, remote control Lock/Unlock setting, temperature setting, energy setting, and silent mode can be set up to 16 times per day.

**Yearly Schedule**
Schedule settings for a year are also possible. The weekday, holiday, special day 1 or special day 2 can be selected and set.

## Operation time history

Possible to check operation time history for cooling and heating separately.

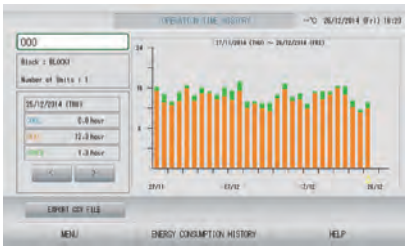

## Alarm history

A maximum of 300 records is displayed for the history of error occurrence and restoration in the unit of air-conditioner.
It is possible to output the history data to a CSV data file.

## High visibility

Increasing in size from 7 to 9 inches

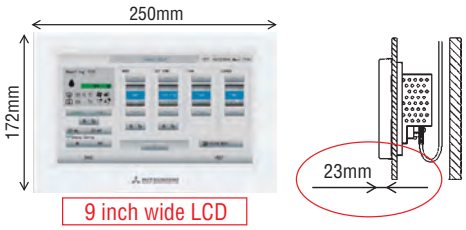


Contrast between five colors for icon display and black light base screen has achieved high visibility.

Green : in operation
Blue : stop
Red : error
Yellow : communication error
Gray : no groups

## Block layout function

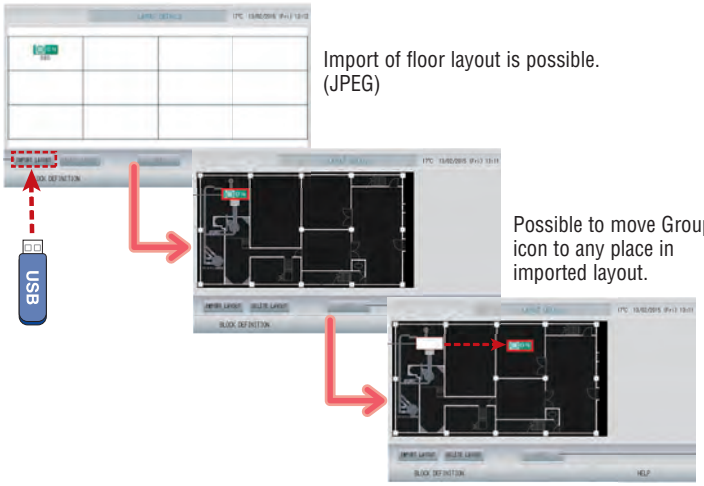


Import of floor layout is possible. (JPEG)

Possible to move Group icon to any place in imported layout.

## Web function

You can monitor and control up to 128 indoor units (Max.128 groups) from a PC or tablet PC.

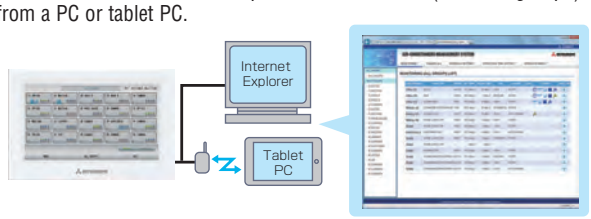


<Example>
Monitoring and operating air-conditioners in a lecture room of a university

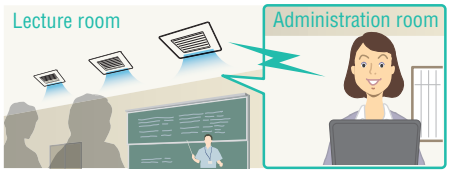


## 3 levels of demand control from 2 external inputs

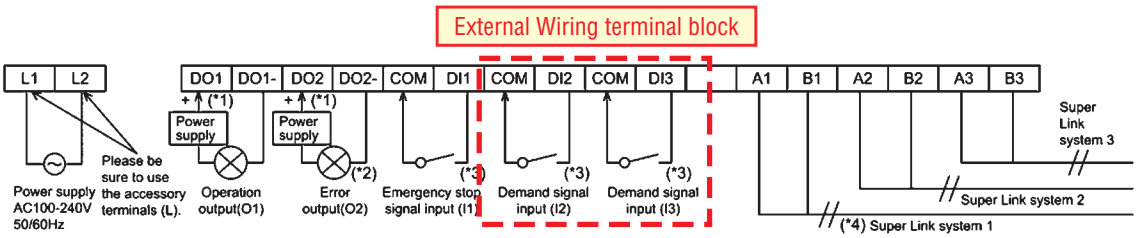


| Demand level | Control | Not objective | | | Set to D1 | | | Set to D2 | | | Set to D3 | | |
|---|---|---|---|---|---|---|---|---|---|---|---|---|---|
| | | Set temp. | Operation mode | Center/ Remote | Set temp. | Operation mode | Center/ Remote | Set temp. | Operation mode | Center/ Remote | Set temp. | Operation mode | Center/ Remote |
| 0 | Normal | – | – | – | – | – | – | – | – | – | – | – | – |
| 1 | Temp. shift | – | – | – | Shift | – | Center | – | – | – | – | – | – |
| 2 | Fan (1stage) | – | – | – | – | Fan | Center | – | Fan | Center | – | – | – |
| 3 | Fan (2stage) | – | – | – | – | Fan | Center | – | Fan | Center | – | Fan | Center |

**Demand level 1** – Any indoor unit set to D1 (Demand level 1)has its temperature set point shifted by +2°C in cooling mode or -2°C in heating mode and cannot be operated from the local remote controller
**Demand level 2** – Any indoor unit set to D1 or D2 switch to fan only mode and cannot be operated from the local remote controller
**Demand level 3** – Any indoor unit set to D1 or D2 or D3 switch to fan only mode and cannot be operated from the local remote controller

## Electric power calculation function:

(for SC-SL4-BE only)

SC-SL4-BE gives electric power consumption data (kWh) for each indoor unit , each group , each SUPERLINK II system , and each watt-hour meter input.

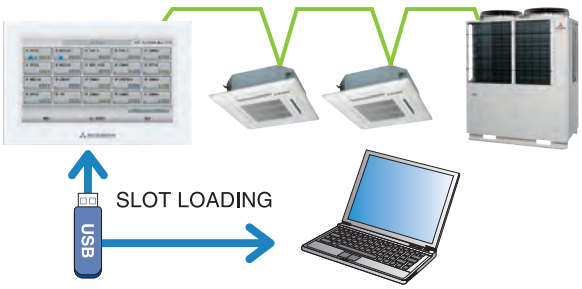


| | SC-SL4-BE |
|---|---|
| Export data by | USB / LAN |
| Calculation software | Included |
| Watt-hour meter pulse input (Maximum) | 8 |
| Max connectable indoor units | 128 |

| Item | Model | SC-SL4-AE/SC-SL4-BE |
|---|---|---|
| Ambient temperature during use | | 0 ~ 40°C |
| Power supply | | 1 Phase 100-240V 50/60Hz |
| Power consumption | | 9W |
| External dimensions (Height x Width x Depth) | | 172mm x 250mm x 23 (+70) mm |
| Net weight | | 2.0kg |
| Number of connectable units (indoor units) | | up to 128 units |
| LCD touch panel | | Colour LCD, 9 inches wide |
| Inputs | SL (Superlink) signal inputs | 1 system (Super link-II) |
| | Watt-hour meter pulse input* | 8-point, pulse width 80ms or more |
| | Emergency stop signal input* | 1 point, non-voltage a contact input continuous input (closed, forced stop) |
| | Demand signal input* | 2 point, non-voltage a contact input continuous input (closed, demand control) |
| Outputs | Operation output | 1 point, maximum rated current 40mA, DC24 V All units stop; Open, any unit operating;Close |
| | Error output | 1 point maximum rated current 40mA, DC24 V Normal; closed. If even one unit is abnormal; Open |

* The receiving side power supply is DC 12V (10mA).
The air conditioning charges calculations of this unit are not based on OIML, the international standard.

# <Central Control>

## SC-SL1N-E

**Start/stop control of up to 16 indoor units either individually or collectively.**

**Simple centralised control.**

1. The SC-SL1N-E is connected to the Superlink-Ⅱ network via 2-core, non-polar wires ('AB' connection).
2. It will monitor and control the start/stop function of up to 16 units, with the sixteen operation button.
3. The unit or group numbers in operation or in need of service are displayed with an LED.
4. Collective start/stop is also available through the simultaneous on/off button.
5. Up to 12 SC-SL1N-E units can be connected to a Superlink-Ⅱ network (consisting of up to 128 indoor units).
6. If a power failure occurs, the SC-SL1N-E will resume the operation of the system according to a stored operation condition, once power is restored.

## SC-SL2NA-E

**Central control of up to 64 indoor units including weekly timer function as standard.**

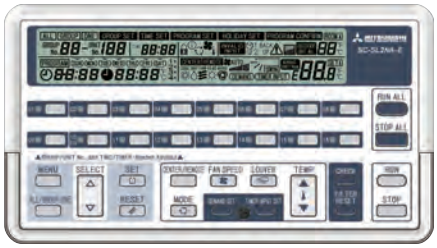

1. The SC-SL2NA-E is connected to the Superlink-Ⅱ network via 2-core, non-polar wires ('AB' connection).
2. It will monitor and control the start/stop function of up to16 units, or 16 groups of units, with the sixteen operation buttons.
3. It also monitors and controls the following functions for individual units, groups of units or the complete network: operation mode, set point temperature, return air temperature, louvre position, error code. Air flow and center lock function.
4. The unit or group numbers in operation or in need of service are displayed with an LCD.
5. Collective start/stop is also available through the simultaneous on/off button.
6. If a power failure occurs, the SC-SL2NA-E will resume the operation of the system according to a stored operation condition, once power is restored.
7. The SC-SL2NA-E can be connected to an external timer to facilitate timed on/off cycles.

### Example of control by a center control SC-SL2NA-E

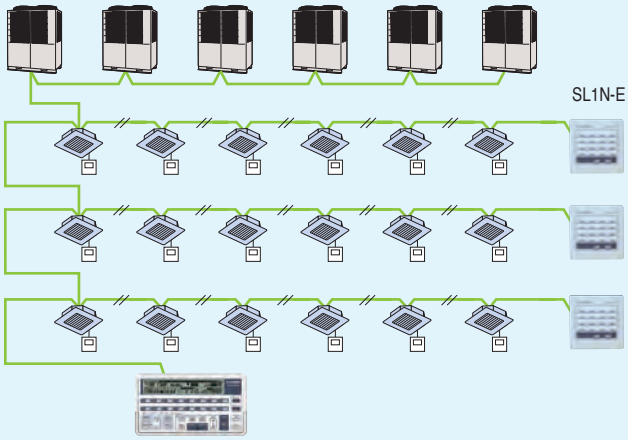


An SC-SL2NA-E performs the start/stop control, monitoring and mode setting of up to 64 units. It is a high quality air conditioner control system that allows up to 64 indoor units to be freely grouped into 1 to 16 groups.
It allows not only the start/stop control but also the monitoring, display of operation statuses such as in operation or in need of service and mode setting such as switching of operation modes of connected units collectively, by group or individually.
• Outer dimensions: H120 x W215 x D25+35*mm.
35* is the measurement including the part contained in a recess.

### SC-GIFN-E Interface kit

• Applicable products
Ventilation fan, Air purifier
• By using SC-GIFN-E together with central control such as SC-SL1N-E, SC-SL2NA-E and SC-SL4-AE/BE, you can start-stop, operate & monitor the operation of applicable products.

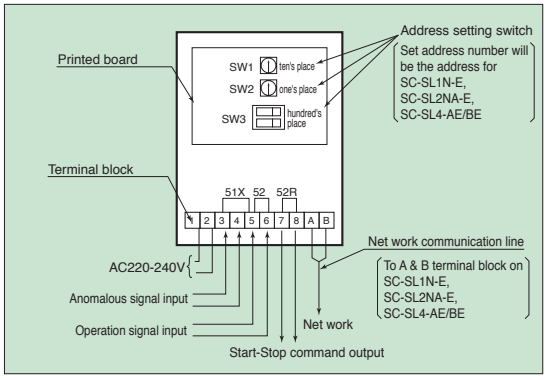


**Note:Please consult dealer for combination of center controls and BMS interface units.**

# <PC windows central control>

## SC-WGWNB256-A/B, SC-WGWNB-A/B (Web gateway) Production by order

(SC-WGWNB256-B/WGWNB-B are with electric power calculation function)

In case of SC-WGWNB256-A/B, control and monitoring of up to 256 cells (some cells can have two or more indoor units and total number of indoor units can be up to 256 units) centralised to a network PC using the Superlink-Ⅱ web gateway. Simple installation is assured with no special software requirements, operation is via Internet Explorer. A low power embedded CPU and compact flash ROM ensure a large storage capacity with high reliability (no moving parts such as a PC fan, etc). An IP address filter function combined with three-level user authentication check also ensures security.

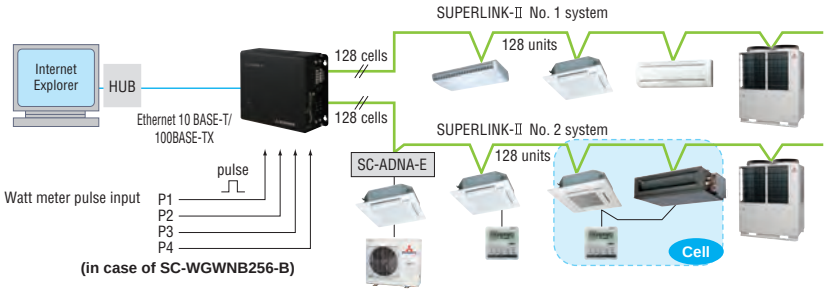


Additional engineering service cost etc. is required.
Please consult your dealer when using this central control.

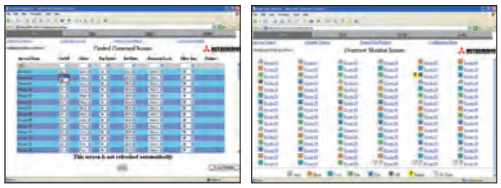

PC requirements: Windows XP or Windows Vista or Windows 7.
Monitor resolution 1024 x 768.

# <BMS interface unit>

## SC-BGWNA256-A/B, SC-BGWNA-A/B(BACnet gateway) Production by order

(SC-BGWNA256-B/BGWNA-B are with electric power calculation function)

SC-BGWNA256-A/B, SC-BGWNA-A/B are interface devices that convert MHI's Superlink-Ⅱ communication data to BACnet code. In case of SC-BGWNA256-A/B, up to 256 cells (some cells can have two or more indoor units and total number of indoor units can be up to 256 units) are controlled centrally from a building management system.

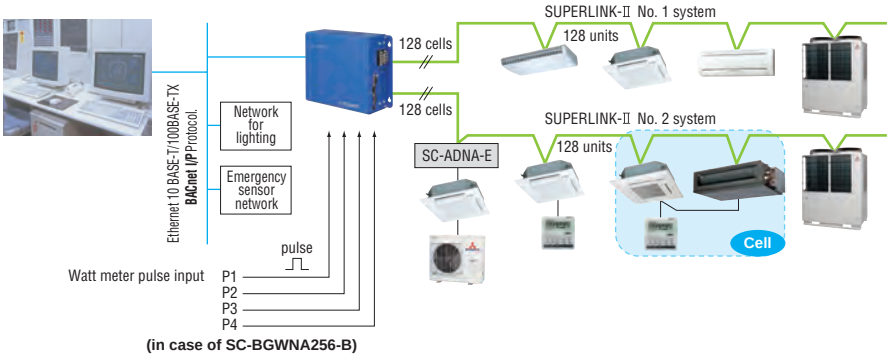


Additional engineering service cost etc. is required.
In case of SC-BGWNA256-B/SC-BGWNA-B, communication test by qualified person regarding electric cost calculation function is required before commissioning.
Please consult your dealer when using this gateway.

## SC-LGWNA-A (LonWorks gateway) Production by order

SC-LGWNA-A is an interface device that converts MHI's Superlink-Ⅱ communication data to LonWorks code. Control and monitoring functions of the a/c system for up to 96 indoor units can be integrated to a central control point via the building management system network.

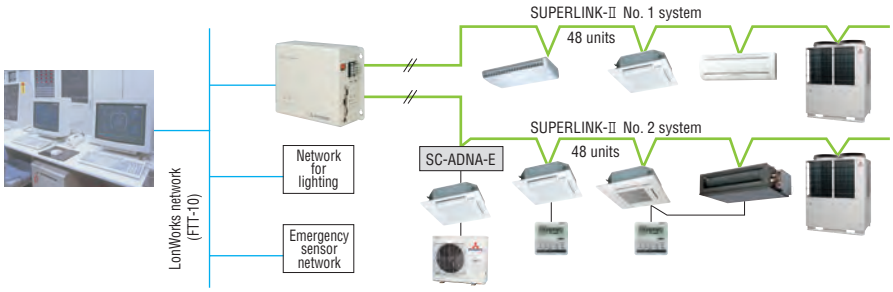


Additional engineering service cost etc. is required.
Please consult your dealer when using this gateway.

# *INTESIS BMS Interface for MHI air conditioners*

All technical support, including specifying work, compatibility issues, product quality (repair and replacement issues), product liability issues and the required after sales service (including spare parts supply) will be provided by Intesis as it is an Intesis product.
Product sales and delivery will be conducted by Intesis as well.
For details concerning such matters please directly contact Intesis.

## Integration of MHI VRF in your KNX installation by Superlink

**MH-AC-KNX-48**
(Max 48 indoor units / Superlink I & II)
**MH-AC-KNX-128**
(Max 128 indoor units / Superlink II)

INTEGRATED GATEWAY

- Bidirectional: Supervision and Control
- Robust and reliable hardware
- Direct connection to KNX TP-1 BUS
- Independent management of communications
- Power supply: 230 VAC 50/60Hz
- Wall mounting case

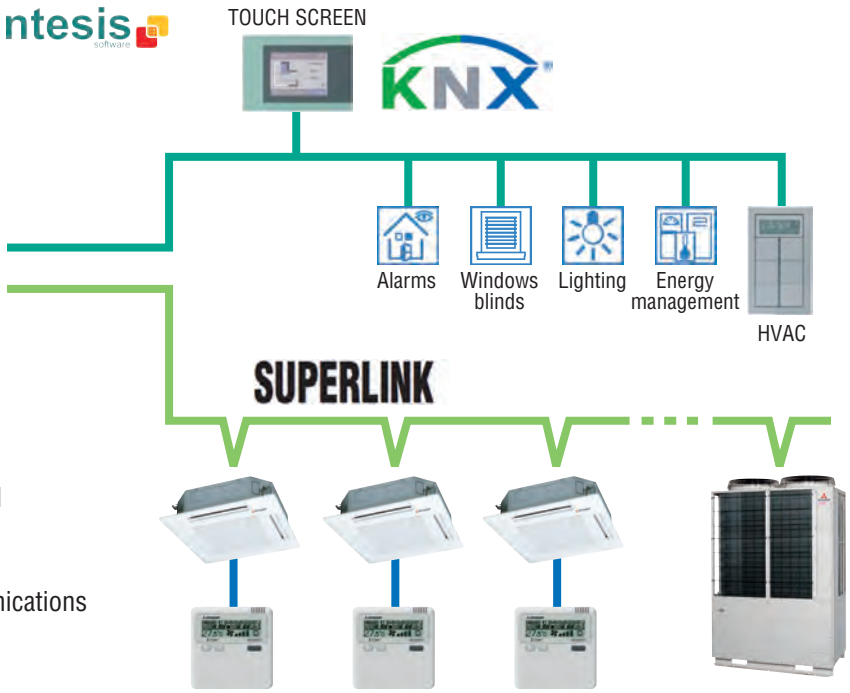


## Integration of MHI VRF in your Modbus installation by Superlink

**MH-AC-MBS-48**
(Max 48 indoor units / Superlink I & II)
**MH-AC-MBS-128**
(Max 128 indoor units / Superlink II)

INTEGRATED GATEWAY

- Bidirectional: Supervision and Control
- Robust and reliable hardware
- Modbus TCP or Modbus RTU RS-485/RS-232
- Independent management of communications
- Power supply: 230 VAC 50/60Hz
- Wall mounting case

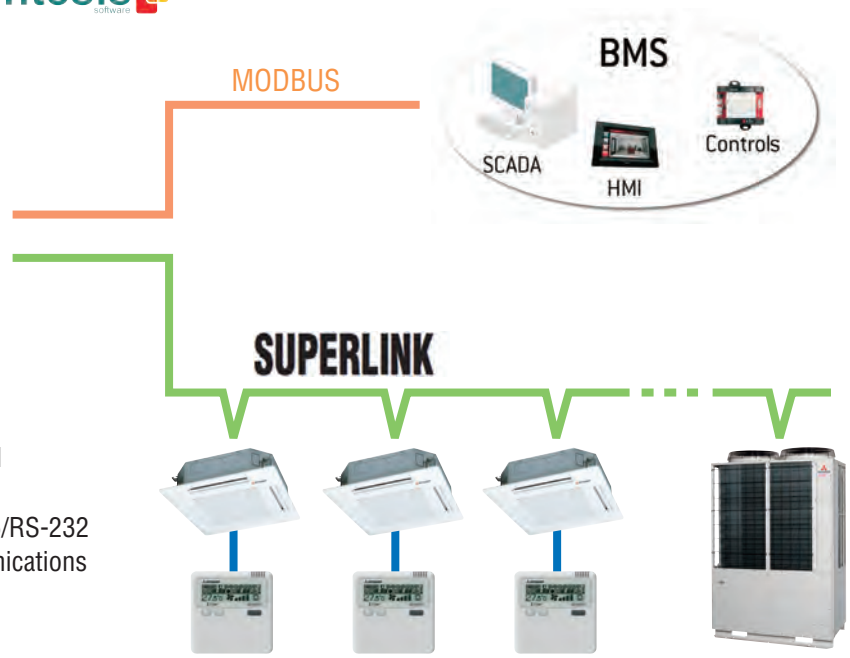

## Integration of MHI PAC in your KNX installation by Remote control line

### MH-RC-KNX-1i

IntesisBox®

- Protocol : KNX TP-1 bus
- Dimension : 71 x 71 x 27 mm
- External Power supply : no need

**Example :**
**Device as Master**

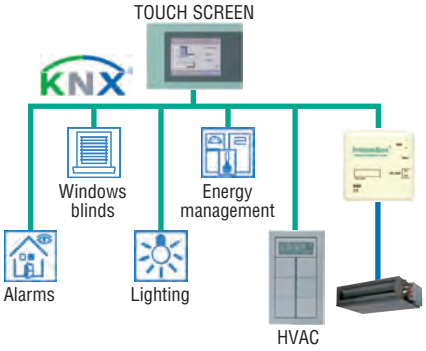


**Example :**
**Device as Slave**

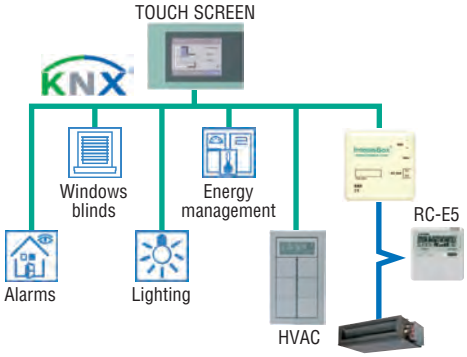


## Integration of MHI PAC in your Modbus installation by Remote control line

### MH-RC-MBS-1

IntesisBox®

- Protocol : Modbus RTU (RS-485)
- Dimension : 93 x 53 x 58 mm
- External Power supply : no need

**Example :**
**Device as Master**

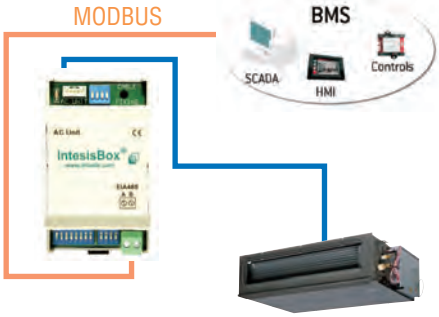


**Example :**
**Device as Slave**

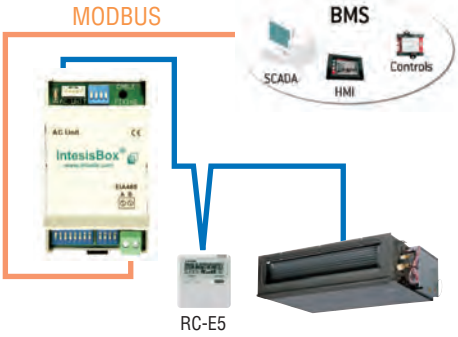


## Integration of MHI PAC in your EnOcean installation by Remote control line

### MH-RC-ENO-1i/1iC

IntesisBox®

- Protocol : EnOcean
  1i : 868MHz@EU
  1iC : 315MHz@USA, ASIA
- Dimension : 100 x 70 x 28 mm
- External Power supply : no need

**Example :**
**Device as Master**

**Example :**
**Device as Slave**

Please access the followings for details.

Intesis software

URL http://www.intesis.com
email info@intesis.com
tel +34 938047 134

# KXZ Outdoor units Standard large connection 10~34HP (28.0kW~95.0kW)

| Model No. | Nominal Cooling Capacity |
|---|---|
| FDCL280KXZE1 | 28.0kW |
| FDCL335KXZE1 | 33.5kW |
| FDCL400KXZE1 | 40.0kW |
| FDCL450KXZE1 | 45.0kW |
| FDCL475KXZE1 | 47.5kW |
| FDCL500KXZE1 | 50.0kW |
| FDCL560KXZE1 | 56.0kW |

| Model No. | | Nominal Cooling Capacity |
|---|---|---|
| FDCL615KXZE1 | (FDCL280+FDCL335) | 61.5kW |
| FDCL670KXZE1 | (FDCL335+FDCL335) | 67.0kW |
| FDCL735KXZE1 | (FDCL335+FDCL400) | 73.5kW |
| FDCL800KXZE1 | (FDCL400+FDCL400) | 80.0kW |
| FDCL850KXZE1 | (FDCL400+FDCL450) | 85.0kW |
| FDCL900KXZE1 | (FDCL450+FDCL450) | 90.0kW |
| FDCL950KXZE1 | (FDCL475+FDCL475) | 95.0kW |

FDCL280KXZE1
FDCL335KXZE1

FDCL400~560KXZE1

## Increased indoor unit connection capacity

This series can connect indoor unit capacity up to 160~200% from 130% of Standard series.

Standard series

| kW | capacity connection |
|---|---|
| 28.0~95.0 | 130% |

Standard large connection series

| kW | capacity connection |
|---|---|
| 28.0~45.0 | 200% |
| 47.5~95.0 | 160% |

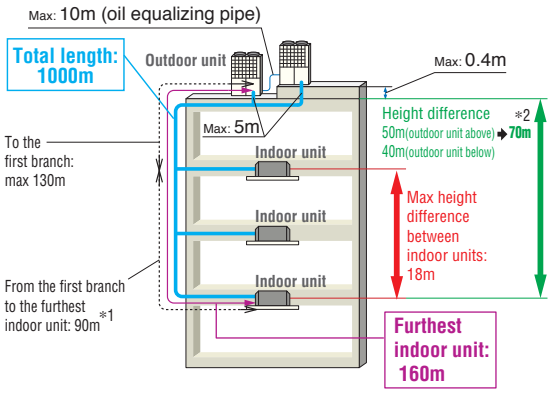


*1 The difference between the longest and the shortest indoor unit piping from the first branch must be within 40m. (MAX85m)
*2 In case of height difference up to 70m, please contact your dealer. Height difference up to 90m is possible with High Head series. Please refer to page 110.

Range of operation

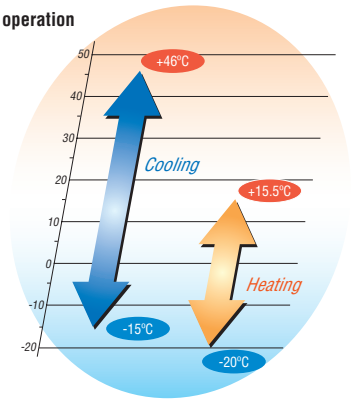

# Specifications

| Item | | | Model | FDCL280KXZE1 | FDCL335KXZE1 | FDCL400KXZE1 | FDCL450KXZE1 |
|---|---|---|---|---|---|---|---|
| Nominal horse power | | | | 10HP | 12HP | 14HP | 16HP |
| Power source | | | | 3Phase 380-415V, 50Hz | | | |
| Starting current | | | A | 5 | | | |
| Max current | | | A | 21.2 | | 32 | |
| Nominal capacity | Cooling | | kW | 28.0 | 33.5 | 40.0 | 45.0 |
| | Heating | | | 31.5 | 37.5 | 45.0 | 50.0 |
| Electrical characteristics | Power consumption | Cooling | kW | 7.24 | 8.96 | 10.96 | 13.98 |
| | | Heating | | 7.28 | 9.04 | 10.69 | 12.50 |
| Exterior dimensions | H x W x D | | mm | 1690x1350x720 | | 2048x1350x720 | |
| Net weight | | | kg | 280 | | 325 | |
| Refrigerant charge | R410A | | kg | 11.0 | | 11.5 | |
| Sound pressure level | Cooling / Heating | | dB(A) | 55/57 | 61/58 | 60/62 | 61/62 |
| Refrigerant piping size | Liquid line | | mm(in) | ø9.52(3/8") | ø12.7(1/2") | | |
| | Gas line | | | ø22.22(7/8") | ø25.4(1")[ø22.22(7/8")] | ø25.4(1")[ø28.58(1 1/8")] | ø28.58(1 1/8") |
| Capacity connection | | | % | 200% | | | |
| Number of connectable indoor units | | | | 24 | 29 | 36 | 40 |

| Item | | | Model | FDCL475KXZE1 | FDCL500KXZE1 | FDCL560KXZE1 |
|---|---|---|---|---|---|---|
| Nominal horse power | | | | 17HP | 18HP | 20HP |
| Power source | | | | 3Phase 380-415V, 50Hz | | |
| Starting current | | | A | 8 | | |
| Max current | | | A | 42.4 | | |
| Nominal capacity | Cooling | | kW | 47.5 | 50.0 | 56.0 |
| | Heating | | | 53.0 | 56.0 | 63.0 |
| Electrical characteristics | Power consumption | Cooling | kW | 13.98 | 13.97 | 16.62 |
| | | Heating | | 13.00 | 13.49 | 15.95 |
| Exterior dimensions | H x W x D | | mm | 2048x1350x720 | | |
| Net weight | | | kg | 378 | | |
| Refrigerant charge | R410A | | kg | 11.5 | | |
| Sound pressure level | Cooling / Heating | | dB(A) | 61/61 | 61/62 | 64/66 |
| Refrigerant piping size | Liquid line | | mm(in) | ø12.7(1/2") | | |
| | Gas line | | | ø28.58(1 1/8") | | |
| Capacity connection | | | % | 160% | | |
| Number of connectable indoor units | | | | 41 | 43 | 48 |

| Item | | | Model | FDCL615KXZE1 | FDCL670KXZE1 | FDCL735KXZE1 | FDCL800KXZE1 | FDCL850KXZE1 | FDCL900KXZE1 | FDCL950KXZE1 |
|---|---|---|---|---|---|---|---|---|---|---|
| Combination (FDC) | | | | 280KXZE1 | 335KXZE1 | 335KXZE1 | 400KXZE1 | 400KXZE1 | 450KXZE1 | 475KXZE1 |
| | | | | 335KXZE1 | 335KXZE1 | 400KXZE1 | 400KXZE1 | 450KXZE1 | 450KXZE1 | 475KXZE1 |
| Nominal horse power | | | | 22HP | 24HP | 26HP | 28HP | 30HP | 32HP | 34HP |
| Power source | | | | 3Phase 380-415V, 50Hz | | | | | | |
| Starting current | | | A | 10 | | | | | | 16 |
| Max current | | | A | 42.4 | | 53.2 | 64 | | | 84.8 |
| Nominal capacity | Cooling | | kW | 61.5 | 67.0 | 73.5 | 80.0 | 85.0 | 90.0 | 95.0 |
| | Heating | | | 69.0 | 75.0 | 82.5 | 90.0 | 95.0 | 100.0 | 106.0 |
| Electrical characteristics | Power consumption | Cooling | kW | 16.20 | 17.92 | 19.92 | 21.92 | 24.94 | 27.96 | 27.96 |
| | | Heating | | 16.32 | 18.08 | 19.73 | 21.38 | 23.19 | 25.00 | 26.00 |
| Exterior dimensions | H x W x D | | mm | 1690x2700x720 | | 2048x2700x720 | | | | |
| Net weight | | | kg | 560 | | 605 | 650 | | | 756 |
| Refrigerant charge | R410A | | kg | 11.0x2 | | 11.0+11.5 | 11.5x2 | | | |
| Refrigerant piping size | Liquid line | | mm(in) | ø12.7(1/2") | | ø15.88(5/8") | | | | |
| | Gas line | | | ø28.58(1 1/8") | | ø31.75(1 1/4")[ø34.92(1 3/8")] | | | | |
| | Oil equalization | | | ø9.52(3/8") | | | | | | |
| Capacity connection | | | % | 160% | | | | | | |
| Number of connectable indoor units | | | | 53 | 58 | 63 | 69 | 73 | 78 | 80 |

1. The data are measured under the following conditions(ISO-T1). Cooling: Indoor temp. of 27ºCDB, 19ºCWB, and outdoor temp. of 35ºCDB. Heating: Indoor temp. of 20ºCDB, and outdoor temp. of 7ºCDB, 6ºCWB. Piping length is 7.5m.
2. Sound pressure level indicates the value in an anechoic chamber. During operation these values are somewhat higher due to ambient conditions.
3. [ ] : Pipe sizes applicable to European installations are shown in parentheses.

# Dimensions

All measurements in mm.

## FDCL280KXZE1, 335KXZE1

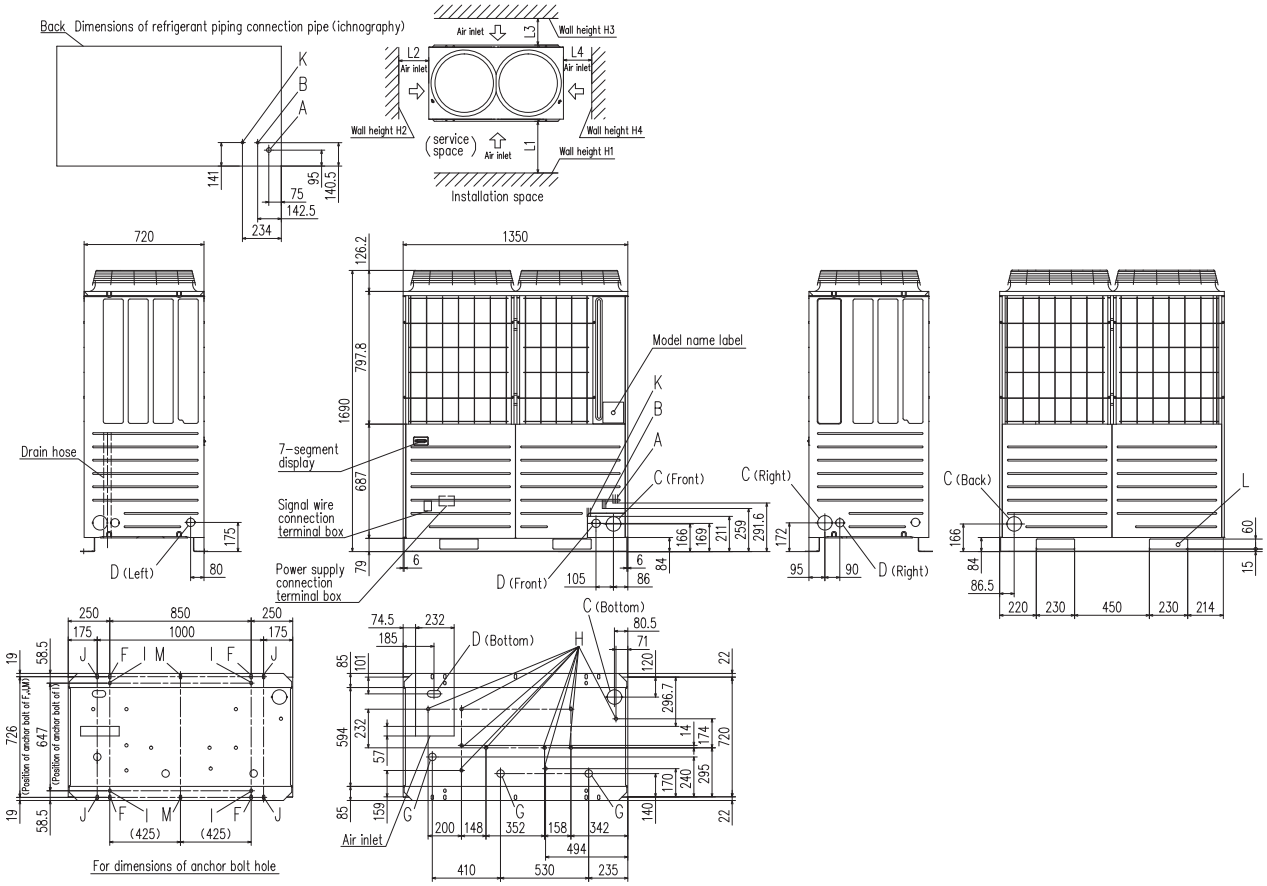


| Mark | Content | 280 | 335 |
|---|---|---|---|
| A | Refrigerant gas piping connection pipe | ø22.22 (Brazing) | ø25.4 (Brazing) |
| B | Refrigerant liquid piping connection pipe | ø9.52 (Flare) | ø12.7 (Flare) |
| C | Refrigerant piping exit hole | ø88 (or ø100) | |
| D | Power supply entry hole | ø50 (Right · Left · Front), Long hole 40 x 80 (Bottom) | |
| F | Anchor bolt hole | M10 x 4 places | |
| G | Drain waste water hose hole | ø45 x 3 places | |
| H | Drain hole | ø20 x 10 places | |
| K | Refrigerant oil equalization piping connection pipe | ø9.52 (Flare) | |
| L | Carrying in or hole for hanging | 230 x 60 | |

| Installation example | | |
|---|---|---|
| Dimensions | 1 | 2 |
| $L_1$ | 500 | Open |
| $L_2$ | 10(30) | 10(30) |
| $L_3$ | 100 | 100 |
| $L_4$ | 10(30) | Open |
| $H_1$ | 1500 | Open |
| $H_2$ | No limit | No limit |
| $H_3$ | 1000 | No limit |
| $H_4$ | No limit | Open |

In case the ambient temperature becomes 43°C or higher during cooling operation

## FDCL400KXZE1, 450KXZE1, 475KXZE1, 500KXZE1, 560KXZE1

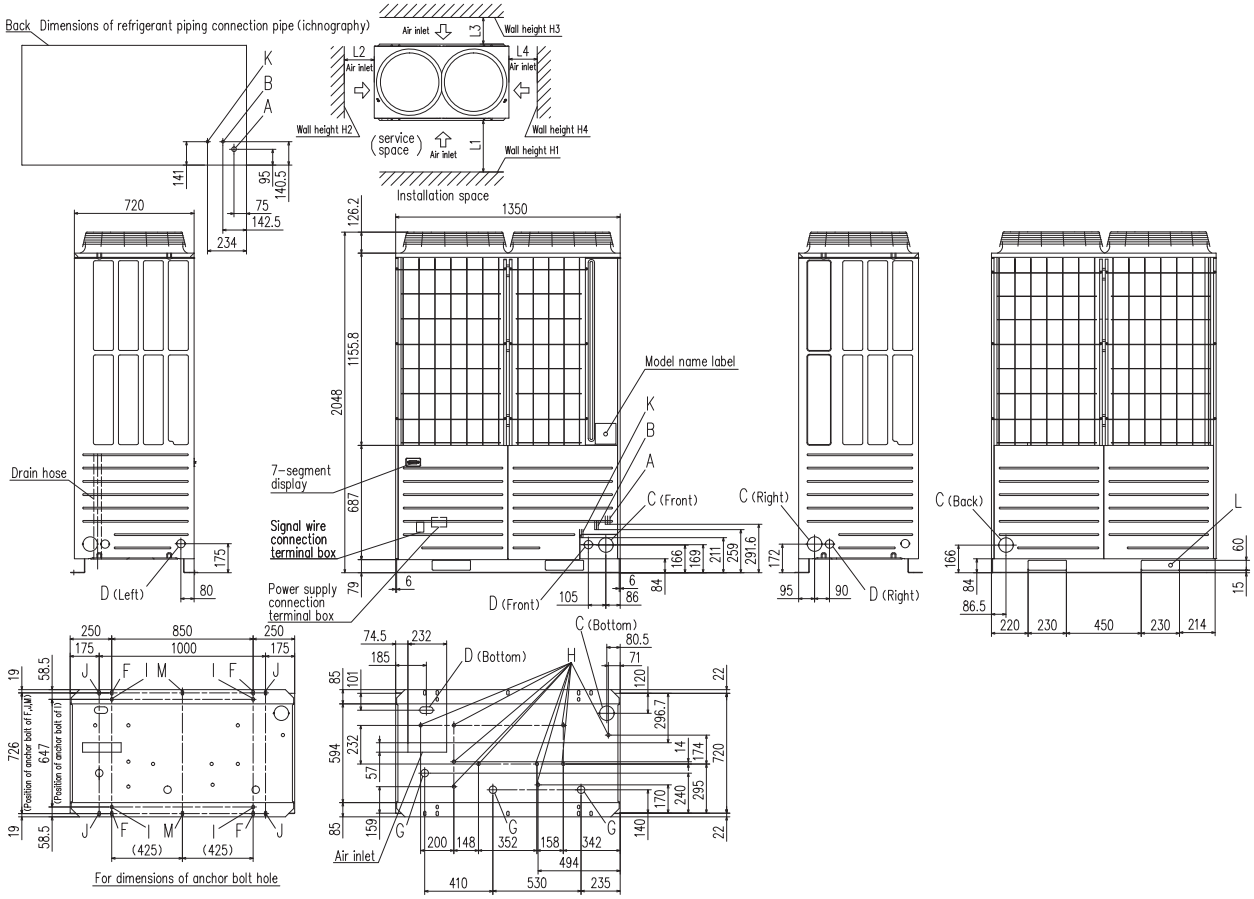


| Mark | Content | 400 | 450,475,500,560 |
|---|---|---|---|
| A | Refrigerant gas piping connection pipe | ø25.4 (Brazing) | ø28.58 (Brazing) |
| B | Refrigerant liquid piping connection pipe | ø12.7 (Flare) | |
| C | Refrigerant piping exit hole | ø88 (or ø100) | |
| D | Power supply entry hole | ø50 (Right · Left · Front), Long hole 40 x 80 (Bottom) | |
| F | Anchor bolt hole | M10 x 4 places | |
| G | Drain waste water hose hole | ø45 x 3 places | |
| H | Drain hole | ø20 x 10 places | |
| K | Refrigerant oil equalization piping connection pipe | ø9.52 (Flare) | |
| L | Carrying in or hole for hanging | 230 x 60 | |

| Installation example | | |
|---|---|---|
| Dimensions | 1 | 2 |
| $L_1$ | 500 | Open |
| $L_2$ | 10(30) | 10(30) |
| $L_3$ | 100 | 100 |
| $L_4$ | 10(30) | Open |
| $H_1$ | 1500 | Open |
| $H_2$ | No limit | No limit |
| $H_3$ | 1000 | No limit |
| $H_4$ | No limit | Open |

In case the ambient temperature becomes 43°C or higher during cooling operation

# Water cooled series
# 8~36HP (22.4~100.0kW)

| Model No. | Nominal Cooling Capacity |
|---|---|
| FDC224KXZWE1 | 22.4kW |
| FDC280KXZWE1 | 28.0kW |
| FDC335KXZWE1 | 33.5kW |
| FDC450KXZWE1(FDC224×2) | 45.0kW |
| FDC500KXZWE1(FDC224+FDC280) | 50.0kW |
| FDC560KXZWE1(FDC280×2) | 56.0kW |
| FDC615KXZWE1(FDC280+FDC335) | 61.5kW |
| FDC670KXZWE1(FDC335×2) | 67.0kW |

| Model No. | Nominal Cooling Capacity |
|---|---|
| FDC730KXZWE1(FDC224×2+FDC280) | 73.0kW |
| FDC775KXZWE1(FDC224+FDC280×2) | 77.5kW |
| FDC850KXZWE1(FDC280×3) | 85.0kW |
| FDC900KXZWE1(FDC280×2+FDC335) | 90.0kW |
| FDC950KXZWE1(FDC280+FDC335×2) | 95.0kW |
| FDC1000KXZWE1(FDC335×3) | 100kW |

## Features

**1. High efficiency (EER/COP)**
- Energy saving ➡ Reduction of operation cost!

**2. Compact design**
- Easy transportation and installation
- Elevator carrying

**3. BMS (Building Management System)**
- Can use the same BMS as air-cooled KX
- Available to large-scale and fine control

**4. Serviceability & Maintenance**
- Service and maintenance of main parts can be done from the front side only
- Useful service tools (Mente-PC, SL-Checker etc.)

## Applicable to

**1. High-rise Building**
- 50m <FDC> , -100m <FDCH>
- 100m or higher in height <FDCW>

**2. Glass-exterior facade Building**
- Possible to hide KXZW units and to keep fine sight

8, 10, 12HP | 16, 18, 20, 22, 24HP | 26, 28, 30, 32, 34, 36HP

## Specifications

| Item | | Model | FDC224KXZWE1 | FDC280KXZWE1 | FDC335KXZWE1 | FDC450KXZWE1 | FDC500KXZWE1 | FDC560KXZWE1 | FDC615KXZWE1 | FDC670KXZWE1 |
|---|---|---|---|---|---|---|---|---|---|---|
| Combination (FDC) | | | - | - | - | 224KXZWE1 | 224KXZWE1 | 280KXZWE1 | 280KXZWE1 | 335KXZWE1 |
| | | | - | - | - | 224KXZWE1 | 280KXZWE1 | 280KXZWE1 | 335KXZWE1 | 335KXZWE1 |
| Nominal horse power | | | 8HP | 10HP | 12HP | 16HP | 18HP | 20HP | 22HP | 24HP |
| Power source | | | 3 Phase 380-415V, 50Hz | | | | | | | |
| Nominal capacity | Cooling | kW | 22.4 | 28.0 | 33.5 | 45.0 | 50.0 | 56.0 | 61.5 | 67.0 |
| | Heating | | 25.0 | 31.5 | 37.5 | 50.0 | 56.0 | 63.0 | 69.0 | 75.0 |
| Power consumption | Cooling | kW | 4.23 | 5.75 | 8.13 | 8.49 | 9.83 | 11.5 | 13.7 | 16.3 |
| | Heating | | 4.24 | 5.10 | 6.30 | 8.47 | 9.27 | 10.2 | 11.4 | 12.6 |
| EER | Cooling | | 5.3 | 4.9 | 4.1 | 5.3 | 5.1 | 4.9 | 4.5 | 4.1 |
| COP | Heating | | 5.9 | 6.2 | 6.0 | 5.9 | 6.0 | 6.2 | 6.1 | 6.0 |
| Exterior dimensions | HxWxD | mm | 1100x780x550 | | | (1100x780x550)x2 | | | | |
| Sound pressure level | | dB(A) | 48 | 50 | 52 | 50 | 52 | 53 | 54 | 55 |
| Net weight | | kg | 185 | | | 185x2 | | | | |

| Item | | Model | FDC730KXZWE1 | FDC775KXZWE1 | FDC850KXZWE1 | FDC900KXZWE1 | FDC950KXZWE1 | FDC1000KXZWE1 |
|---|---|---|---|---|---|---|---|---|
| Combination (FDC) | | | 224KXZWE1 | 224KXZWE1 | 280KXZWE1 | 280KXZWE1 | 280KXZWE1 | 335KXZWE1 |
| | | | 224KXZWE1 | 280KXZWE1 | 280KXZWE1 | 280KXZWE1 | 335KXZWE1 | 335KXZWE1 |
| | | | 280KXZWE1 | 280KXZWE1 | 280KXZWE1 | 335KXZWE1 | 335KXZWE1 | 335KXZWE1 |
| Nominal horse power | | | 26HP | 28HP | 30HP | 32HP | 34HP | 36HP |
| Power source | | | 3 Phase 380-415V, 50Hz | | | | | |
| Nominal capacity | Cooling | kW | 73.0 | 77.5 | 85.0 | 90.0 | 95.0 | 100 |
| | Heating | | 82.5 | 90.0 | 95.0 | 100 | 106 | 112 |
| Power consumption | Cooling | kW | 14.2 | 15.5 | 17.5 | 19.5 | 21.7 | 24.3 |
| | Heating | | 13.8 | 14.8 | 15.4 | 16.4 | 17.6 | 18.8 |
| EER | Cooling | | 5.1 | 5.0 | 4.9 | 4.6 | 4.4 | 4.1 |
| COP | Heating | | 6.0 | 6.1 | 6.2 | 6.1 | 6.0 | 6.0 |
| Exterior dimensions | HxWxD | mm | (1100x780x550)x3 | | | | | |
| Sound pressure level | | dB(A) | 54 | 54 | 55 | 56 | 56 | 57 |
| Net weight | | kg | 185x3 | | | | | |

The data is based on the rating condition:
Cooling: Indoor temp. of 27 °C DB,19 °C WB, and heat source unit inlet water temp. of 30 °C, water flow rate 96 L/min
Heating: Indoor temp. of 20 °C DB,15 °C WB, and heat source unit inlet water temp. of 20 °C, water flow rate 96 L/min

Heat source units on every floor
- New building projects -

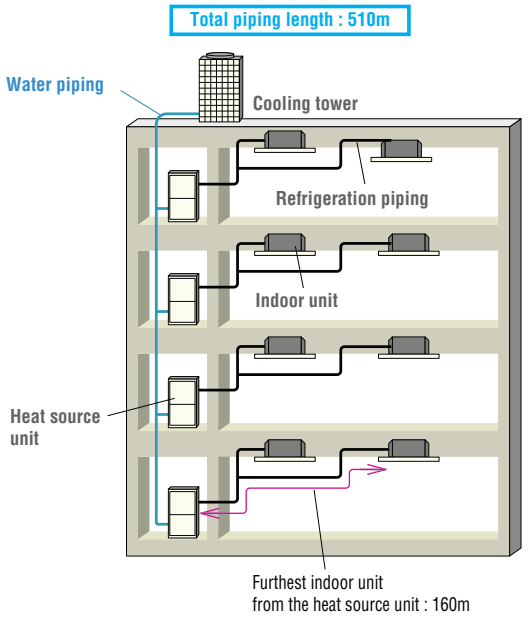


Heat source units in the machine room
- Renovation projects -

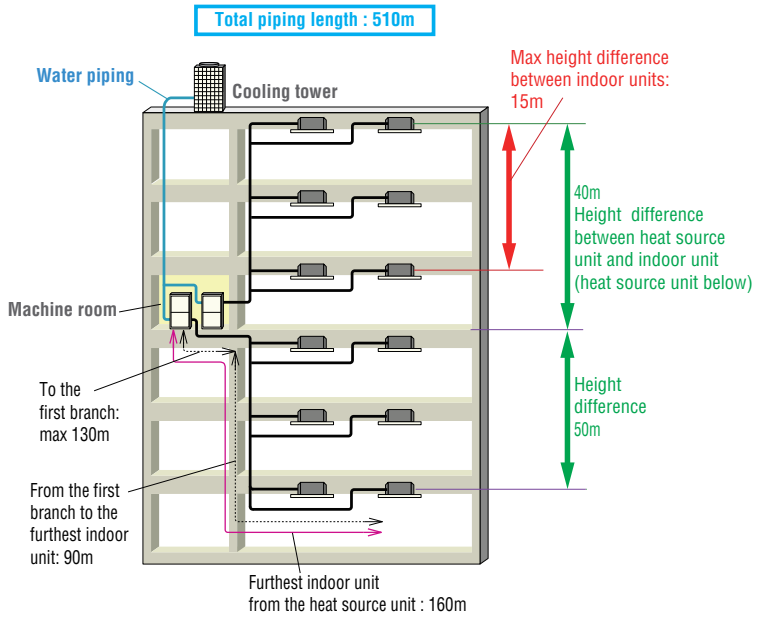


# Dimensions

All measurements in mm.

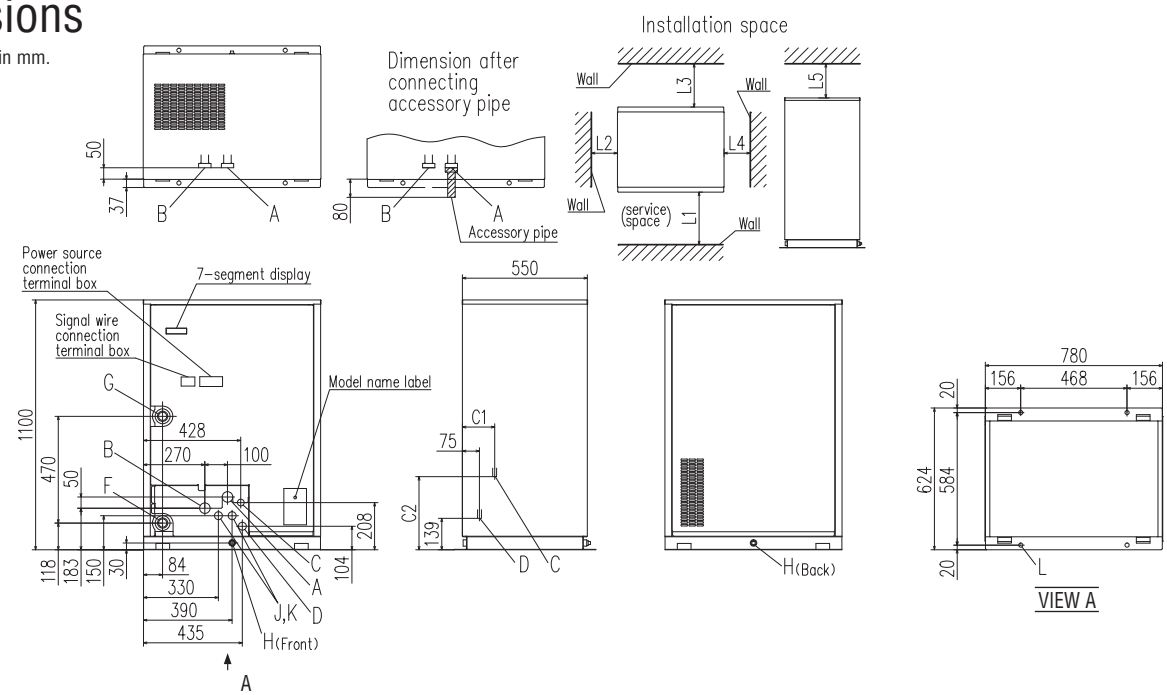


| Mark | Content | |
|---|---|---|
| A | High/low gas line | Refer to piping size |
| B | – | Not to use. |
| C | Liquid line | Refer to piping size |
| D | Oil equalization line | |
| F | Water inlet | R1 1/4 |
| G | Water outlet | R1 1/4 |
| H | Drain outlet | Rp 1/2,2places |
| J | Power source intake | ø35 |
| K | Signal wiring intake | ø35 |
| L | Anchor bolt hole | ø18,4places |

| Dimension | FDC-KXZWE1 | |
|---|---|---|
| | 224,280 | 335 |
| C1 | 142 | 139 |
| C2 | 322 | 316 |

| Dimension \ Installation example | 1 |
|---|---|
| L1 | 600 or more |
| L2 | 20 or more |
| L3 | 500 or more |
| L4 | 20 or more |
| L5 | 300 or more |

## Piping size

| | FDC224KXZWE1 | FDC280KXZWE1 | FDC335KXZWE1 | Connection method |
|---|---|---|---|---|
| High/low gas line | ø19.05 | ø22.22 | ø25.4 | Flange |
| Liquid line | ø9.52 | ø9.52 | ø12.7 | Flare |
| Oil equalization line | ø9.52 | ø9.52 | ø9.52 | |

# High Head series (90m)
# 14~48HP (40.0~136.0kW)

| Model No. | Nominal Cooling Capacity |
|---|---|
| FDCH335KXE6-K※ | 33.5 kW |
| FDCH400KXE6 | 40.0 kW |
| FDCH450KXE6 | 45.0 kW |
| FDCH504KXE6 | 50.4 kW |
| FDCH560KXE6 | 56.0 kW |
| FDCH560KXE6-K※ | 56.0 kW |
| FDCH615KXE6 | 61.5 kW |
| FDCH680KXE6 | 68.0 kW |

※FDCH335KXE6-K & FDCH560KXE6-K are only used for combining with other models.

| Model No. | Nominal Cooling Capacity |
|---|---|
| FDCH735KXE6 (FDCH335-K+FDCH400) | 73.5 kW |
| FDCH800KXE6 (FDCH400x2) | 80.0 kW |
| FDCH850KXE6 (FDCH400+FDCH450) | 85.0 kW |
| FDCH900KXE6 (FDCH450x2) | 90.0 kW |
| FDCH960KXE6 (FDCH450+FDCH504) | 96.0 kW |
| FDCH1010KXE6 (FDCH504x2) | 101.0 kW |
| FDCH1065KXE6 (FDCH504+FDCH560) | 106.5 kW |
| FDCH1130KXE6 (FDCH560x2) | 113.0 kW |
| FDCH1180KXE6 (FDCH560-K+FDCH615) | 118.0 kW |
| FDCH1235KXE6 (FDCH615x2) | 123.5 kW |
| FDCH1300KXE6 (FDCH615+FDCH680) | 130.0 kW |
| FDCH1360KXE6 (FDCH680x2) | 136.0 kW |

- Maximum allowable height difference between the outdoor and the indoor unit located at the lowest height position has been increased from 50m to 90m.
  (When the outdoor unit is located at higher position than the indoor unit)

**FDCH335KXE6-K**
**FDCH400KXE6**
**FDCH450KXE6**

**FDCH504~680KXE6**

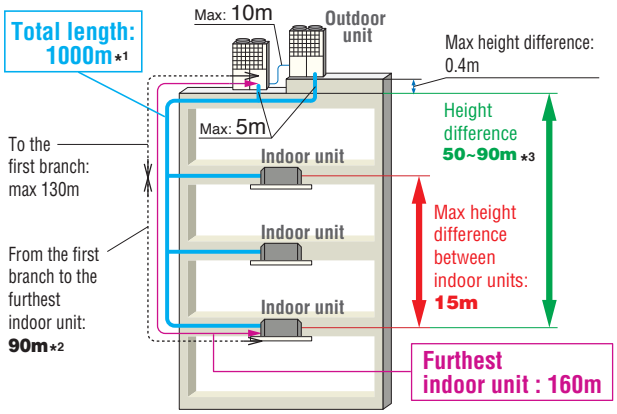


**Range of operation**

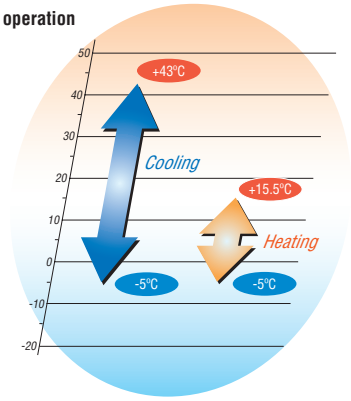


*1 Select the total pipe length depending on the connectable capacity of indoor units.

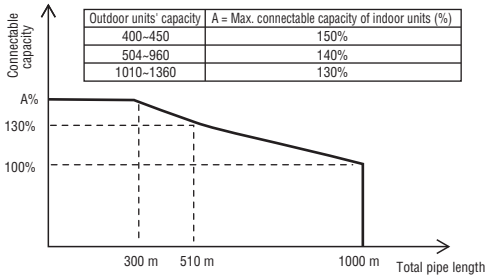


| Outdoor units' capacity | A = Max. connectable capacity of indoor units (%) |
|---|---|
| 400~450 | 150% |
| 504~960 | 140% |
| 1010~1360 | 130% |

*2 The difference between the longest and shortest indoor unit piping from the first branch must be within 40m.

*3 In case of less than 50m, the High Head models can not be applied. In case Indoor unit is higher than outdoor unit, the High Head models can not be applied.

# Specifications

| Item | | | Model | FDCH400KXE6 | FDCH450KXE6 | FDCH504KXE6 | FDCH560KXE6 | FDCH615KXE6 | FDCH680KXE6 |
|---|---|---|---|---|---|---|---|---|---|
| Nominal horse power | | | | 14HP | 16HP | 18HP | 20HP | 22HP | 24HP |
| Power source | | | | 3 Phase 380-415V, 50Hz | | | | | |
| Starting current | | | A | 8 | | | | | |
| Max current | | | A | 47 | | | | | |
| Nominal capacity | Cooling | | kW | 40.0 | 45.0 | 50.4 | 56.0 | 61.5 | 68.0 |
| | Heating | | kW | 45.0 | 50.0 | 56.5 | 63.0 | 69.0 | 73.0 |
| Electrical characteristics | Power consumption | Cooling | kW | 11.27 | 12.97 | 14.73 | 16.79 | 20.37 | 24.98 |
| | | Heating | kW | 11.73 | 13.10 | 15.12 | 16.79 | 18.48 | 19.08 |
| Exterior dimensions | HxWxD | | mm | 1690x1350x720 | | 2048x1350x720 | | | |
| Net weight | | | kg | 336 | | 358 | | 377 | |
| Refrigerant charge | R410A | | kg | 11.5 | | | | | |
| Sound pressure level | Cooling / Heating | | dB(A) | 59.5 / 59.5 | 62.5 / 62.5 | 61.5 / 61.5 | 63.0 / 63.0 | 64.5 / 64.5 | 65.0 / 65.0 |
| Refrigerant piping size | Liquid line | | mm(in) | ø12.7(1/2") | | ø15.88(5/8") | | | |
| | Gas line | | | ø25.4(1") [ø28.58(1 1/8")] | ø28.58(1 1/8") | ø28.58(1 1/8") | | | |
| Capacity connection | | | % | 50~150 | | 50~140 | | | |
| Number of connectable indoor units | | | | 36 | 40 | 36 | 40 | 44 | 49 |

| Item | | | Model | FDCH735KXE6 | FDCH800KXE6 | FDCH850KXE6 | FDCH900KXE6 |
|---|---|---|---|---|---|---|---|
| Combination (FDCH) | | | | 335KXE6-K | 400KXE6 | 400KXE6 | 450KXE6 |
| | | | | 400KXE6 | 400KXE6 | 450KXE6 | 450KXE6 |
| Nominal horse power | | | | 26HP | 28HP | 30HP | 32HP |
| Power source | | | | 3 Phase 380-415V, 50Hz | | | |
| Starting current | | | A | 16 | | | |
| Max current | | | A | 94 | | | |
| Nominal capacity | Cooling | | kW | 73.5 | 80.0 | 85.0 | 90.0 |
| | Heating | | kW | 82.5 | 90.0 | 95.0 | 100.0 |
| Electrical characteristics | Power consumption | Cooling | kW | 20.21 | 22.54 | 24.24 | 25.94 |
| | | Heating | kW | 20.66 | 23.46 | 24.83 | 26.20 |
| Exterior dimensions | HxWxD | | mm | 1690x2700x720 | | | |
| Net weight | | | kg | 336x2 | | | |
| Refrigerant charge | R410A | | kg | 11.5x2 | | | |
| Refrigerant piping size | Liquid line | | mm(in) | ø19.05(3/4") | | | |
| | Gas line | | | ø31.8(1 1/4") [ø34.92(1 3/8")] | | | |
| Capacity connection | | | % | 50~140 | | | |
| Number of connectable indoor units | | | | 53 | 58 | 61 | 65 |

| Item | | | Model | FDCH960KXE6 | FDCH1010KXE6 | FDCH1065KXE6 | FDCH1130KXE6 |
|---|---|---|---|---|---|---|---|
| Combination (FDCH) | | | | 450KXE6 | 504KXE6 | 504KXE6 | 560KXE6 |
| | | | | 504KXE6 | 504KXE6 | 560KXE6 | 560KXE6 |
| Nominal horse power | | | | 34HP | 36HP | 38HP | 40HP |
| Power source | | | | 3 Phase 380-415V, 50Hz | | | |
| Starting current | | | A | 16 | | | |
| Max current | | | A | 94 | | | |
| Nominal capacity | Cooling | | kW | 96.0 | 101.0 | 106.5 | 113.0 |
| | Heating | | kW | 108.0 | 113.0 | 119.5 | 127.0 |
| Electrical characteristics | Power consumption | Cooling | kW | 27.70 | 29.46 | 31.52 | 33.58 |
| | | Heating | kW | 28.22 | 30.24 | 31.91 | 33.58 |
| Exterior dimensions | HxWxD | | mm | 2048x2700x720 | | | |
| Net weight | | | kg | 336+358 | 358x2 | | |
| Refrigerant charge | R410A | | kg | 11.5x2 | | | |
| Refrigerant piping size | Liquid line | | mm(in) | ø19.05(3/4") | | ø22.22(7/8") | |
| | Gas line | | | ø31.8(1 1/4")[ø34.92(1 3/8")] | | ø38.1(1 1/2") | |
| Capacity connection | | | % | 50~140 | 50~130 | | |
| Number of connectable indoor units | | | | 69 | 59 | 62 | 66 |

| Item | | | Model | FDCH1180KXE6 | FDCH1235KXE6 | FDCH1300KXE6 | FDCH1360KXE6 |
|---|---|---|---|---|---|---|---|
| Combination (FDCH) | | | | 560KXE6-K | 615KXE6 | 615KXE6 | 680KXE6 |
| | | | | 615KXE6 | 615KXE6 | 680KXE6 | 680KXE6 |
| Nominal horse power | | | | 42HP | 44HP | 46HP | 48HP |
| Power source | | | | 3 Phase 380-415V, 50Hz | | | |
| Starting current | | | A | 16 | | | |
| Max current | | | A | 94 | | | |
| Nominal capacity | Cooling | | kW | 118.0 | 123.5 | 130.0 | 136.0 |
| | Heating | | kW | 132.0 | 138.0 | 142.0 | 146.0 |
| Electrical characteristics | Power consumption | Cooling | kW | 37.16 | 40.74 | 45.35 | 49.96 |
| | | Heating | kW | 35.27 | 36.96 | 37.56 | 38.16 |
| Exterior dimensions | HxWxD | | mm | 2048x2700x720 | | | |
| Net weight | | | kg | 377x2 | | | |
| Refrigerant charge | R410A | | kg | 11.5x2 | | | |
| Refrigerant piping size | Liquid line | | mm(in) | ø22.22(7/8") | | | |
| | Gas line | | | ø38.1(1 1/2") | | | |
| Capacity connection | | | % | 50~130 | | | |
| Number of connectable indoor units | | | | 69 | 72 | 76 | 80 |

1. The data are measured under the following conditions(ISO-T1). Cooling: Indoor temp. of 27°CDB, 19°CWB, and outdoor temp. of 35°CDB. Heating: Indoor temp. of 20°CDB, and outdoor temp. of 7°CDB, 6°CWB. Piping length is 7.5m.
2. Sound pressure level indicates the value in an anechoic chamber. During operation these values are somewhat higher due to ambient conditions.
3. [ ] : Pipe sizes applicable to European installations are shown in parentheses.

# Dimensions

All measurements in mm.

## FDCH335KXE6-K, 400KXE6, 450KXE6

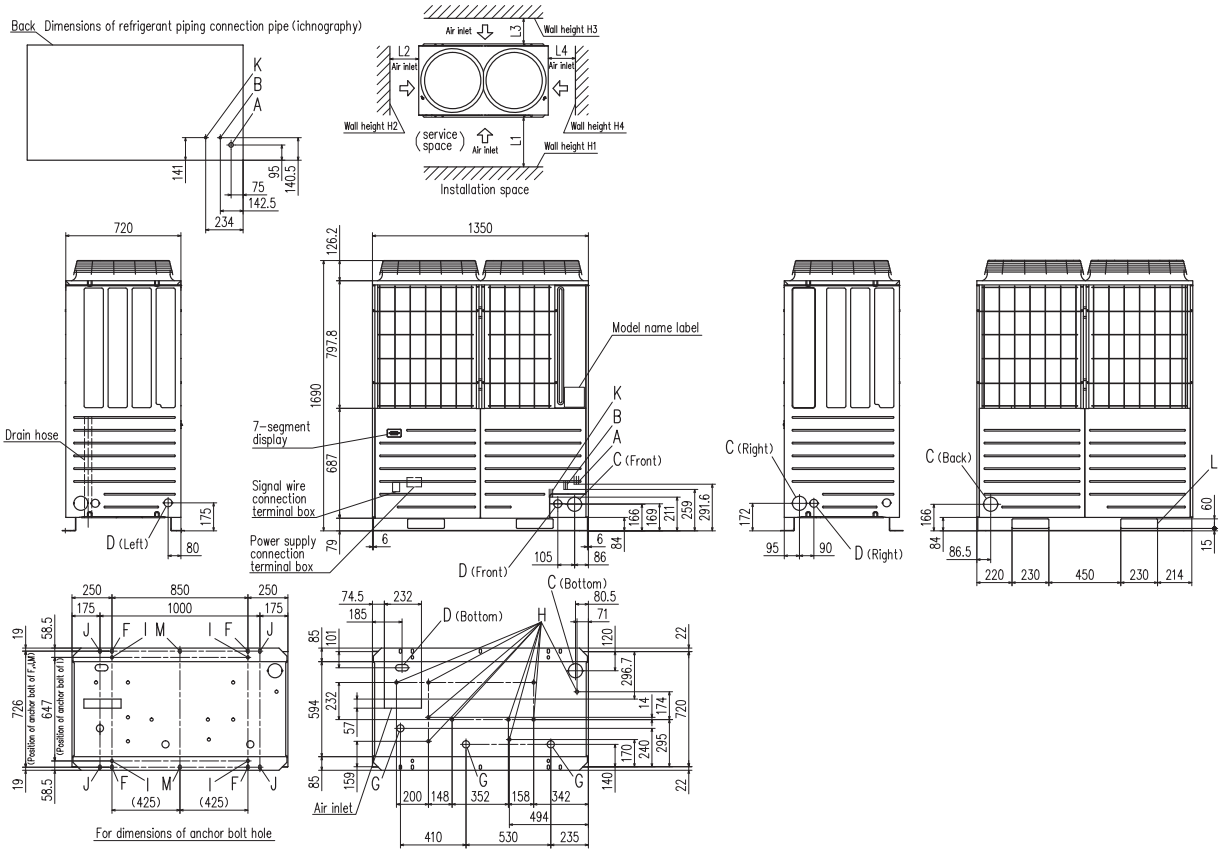


| Mark | Content | 335-K | 400 | 450 |
|---|---|---|---|---|
| A | Refrigerant gas piping connection pipe | ø25.4(Brazing) | | ø28.58(Brazing) |
| B | Refrigerant liquid piping connection pipe | ø12.7(Flare) | | |
| C | Refrigerant piping exit hole | ø88(or ø100) | | |
| D | Power supply entry hole | ø50 (right · left · front), long hole 40 x 80 (under side) | | |
| F | Anchor bolt hole | M10 x 4 places | | |
| G | Drain waste water hose hole | ø45 x 3 places | | |
| H | Drain hole | ø20 x 10 places | | |
| K | Refrigerant oil equalization piping connection pipe | ø9.52(Flare) | | |
| L | Carrying in or hole for hanging | 230 x 60 | | |

| Installation example | | |
|---|---|---|
| Dimensions | 1 | 2 |
| $L_1$ | 500 | Open |
| $L_2$ | 10 | 10 |
| $L_3$ | 100 | 100 |
| $L_4$ | 10 | Open |
| $H_1$ | 1500 | Open |
| $H_2$ | No limit | No limit |
| $H_3$ | 1000 | No limit |
| $H_4$ | No limit | Open |

Notes:
(1) The unit must be fixed with anchor bolts.
(2) Leave a 2m or larger space above the unit.
(3) The unit name plate is attached on the lower right corner of the front panel.
(4) The ports for refrigerant pipe and power cable penetrations are covered with half-blanks. Please cut off a half-blank with nippers in using these ports.
(5) Use a ø88 port for refrigerant pipe connection.
(6) Anchor holes marked "L J" (four holes for M10) are for a renewal installation.
(7) The oil-equalising pipe K should be used when outdoor units are used in combination. (For 14,16HP only)

**When more than one unit is installed**

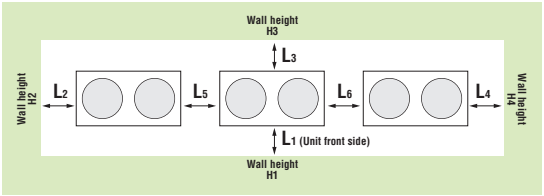


| Installation example | | |
|---|---|---|
| Dimensions | A | B |
| $L_1$ | 500 | Open |
| $L_2$ | 10 | 200 |
| $L_3$ | 100 | 300 |
| $L_4$ | 10 | Open |
| $L_5$ | 0 | 400 |
| $L_6$ | 0 | 400 |
| $H_1$ | 1500 | No limit |
| $H_2$ | No limit | No limit |
| $H_3$ | 1000 | No limit |
| $H_4$ | No limit | No limit |

# Dimensions

All measurements in mm.

## FDCH504KXE6, 560KXE6, 560KXE6-K, 615KXE6, 680KXE6

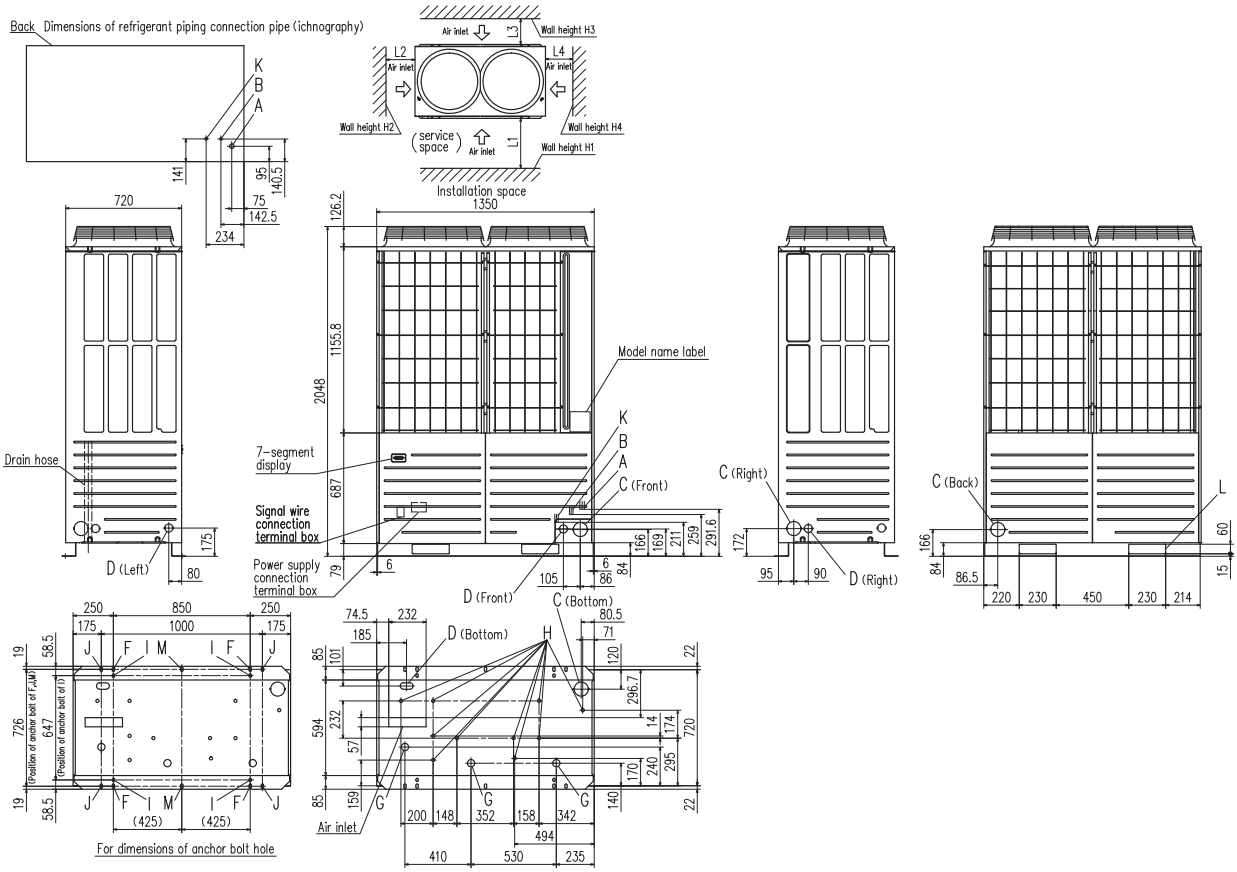


| Mark | Content | |
|---|---|---|
| A | Refrigerant gas piping connection pipe | ø28.58(Brazing) |
| B | Refrigerant liquid piping connection pipe | ø12.7(Flare) |
| C | Refrigerant piping exit hole | ø88(or ø100) |
| D | Power supply entry hole | ø50 (right · left · front), long hole 40 x 80 (under side) |
| F | Anchor bolt hole | M10 x 4 places |
| G | Drain waste water hose hole | ø45 x 3 places |
| H | Drain hole | ø20 x 10 places |
| K | Refrigerant oil equalization piping connection pipe | ø9.52(Flare) |
| L | Carrying in or hole for hanging | 230 x 60 |

| Installation example | | |
|---|---|---|
| Dimensions | 1 | 2 |
| $L_1$ | 500 | Open |
| $L_2$ | 10 | 10 |
| $L_3$ | 100 | 100 |
| $L_4$ | 10 | Open |
| $H_1$ | 1500 | Open |
| $H_2$ | No limit | No limit |
| $H_3$ | 1000 | No limit |
| $H_4$ | No limit | Open |

Notes:
(1) The unit must be fixed with anchor bolts.
(2) Leave a 2m or larger space above the unit.
(3) The unit name plate is attached on the lower right corner of the front panel.
(4) The ports for refrigerant pipe and power cable penetrations are covered with half-blanks. Please cut off a half-blank with nippers in using these ports.
(5) Use a ø88 port for refrigerant pipe connection.
(6) Anchor holes marked “L J” (four holes for M10) are for a renewal installation.
(7) The oil-equalising pipe K should be used when outdoor units are used in combination.

# Refresh series

## If replacing a used unit with a new one, these units can reuse existing piping.

| Model No. | Nominal Cooling Capacity |
|---|---|
| FDCR224KXE6 | 22.4kW |
| FDCR280KXE6 | 28.0kW |

**<Option>**

FDCR-KIT-E : Service valve kit

- Applies to a wide range of pipe sizes (R22, R407C, R410A standard size).
- Meets to a short period of renewal installation.
- Savings on replacement expenses such as scrapping waste material or procuring new pipe.
- Possible to replace the existing unit with a new larger capacity unit.
- Possible to replace plural systems with one system.
  For example:Existing 5HP x 2units can be replaced with a new 10HP x 1unit.

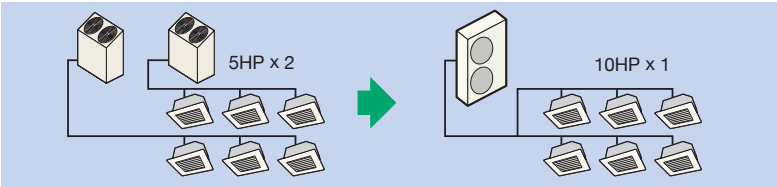


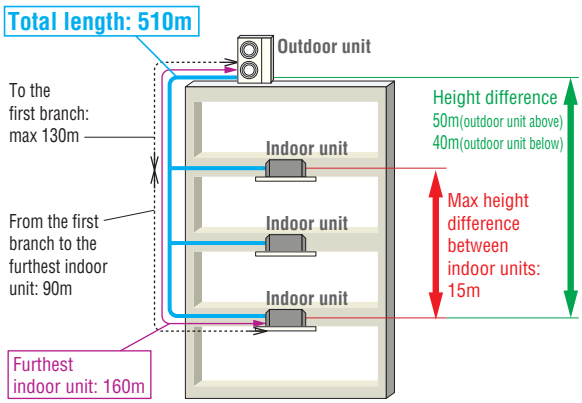


**Range of operation**

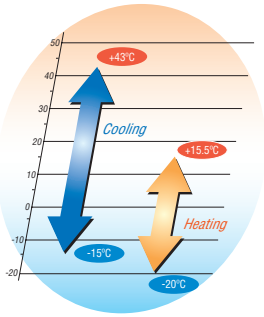


# Specifications

| Item | | | Model | FDCR224KXE6 | FDCR280KXE6 |
|---|---|---|---|---|---|
| Nominal horse power | | | | 8HP | 10HP |
| Power source | | | | 3 Phase 380-415V, 50Hz | |
| Starting current | | | A | 5 | |
| Max current | | | A | 20 | |
| Nominal capacity | Cooling | | kW | 22.4 | 28.0 |
| | Heating | | | 25.0 | 31.5 |
| Electrical characteristics | Power consumption | Cooling | kW | 5.60 | 8.09 |
| | | Heating | | 6.03 | 8.21 |
| Exterior dimensions | HxWxD | | mm | 1675x1080x480 | |
| Net weight | | | kg | 224 | |
| Refrigerant charge | R410A | | kg | 11.5 | |
| Sound pressure level | Cooling/Heating | | dB(A) | 58/58 | 59/60 |
| Refrigerant piping size | Liquid line | | mm(in) | ø9.52(3/8")~ø15.88(5/8") | |
| | Gas line | | | ø19.05(3/4")~ø25.4(1") | ø22.22(7/8")~ø28.58(1 1/8") |
| Capacity connection | | | % | 50~130 | |
| Number of connectable indoor units | | | | 13 | 16 |

1. The data are measured under the following conditions(ISO-T1). Cooling: Indoor temp. of 27°CDB, 19°CWB, and outdoor temp. of 35°CDB. Heating: Indoor temp. of 20°CDB, and outdoor temp. of 7°CDB, 6°CWB.
2. Sound pressure level indicates the value in an anechoic chamber. During operation these values are somewhat higher due to ambient conditions.

## Advanced refresh function

### ◆When the existing unit is operable

**The existing pipe can be reused by cooling operation only.**
**Pipe refresh kit and Service valve kit are not required.**

1. Implement cooling operation of all indoor units for more than 30 minutes.
2. Implement pump-down after cooling operation.
3. Recover refrigerant and remove the existing outdoor unit and indoor unit.

### ◆When the existing unit is not operable

**The existing pipe can be reused by washing operation after connecting Refresh outdoor units, Pipe refresh kit and Service valve kit.**
**Connecting and removing of Refresh outdoor units and Pipe refresh kit is very easy by use of flexible pipe and flanges.**

1. Pipe washing operation is implemented by changing dip switch on the outdoor unit PCB.
2. Completing washing is monitored via 7-segment display on the outdoor unit PCB.
3. As washing operation is about 60 minutes, it can meet to a required short period of renewal installation.

7-segment display

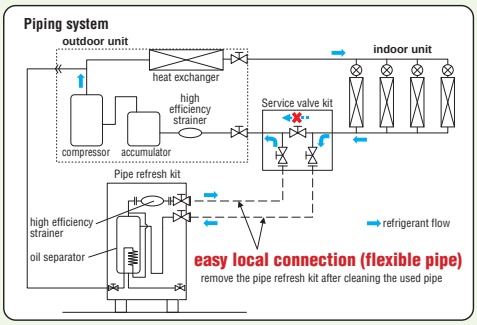


Pipe refresh kit (FDCR-KIT-E)

# Dimensions

All measurements in mm.

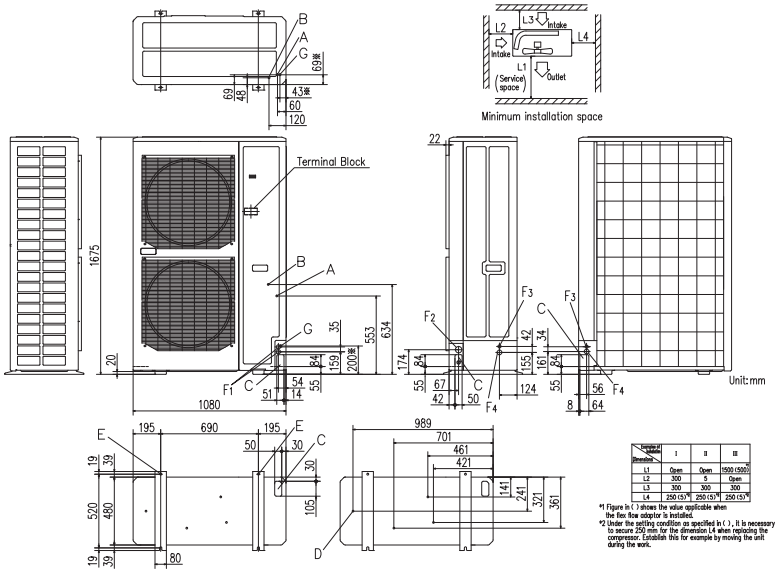


Service valve kit

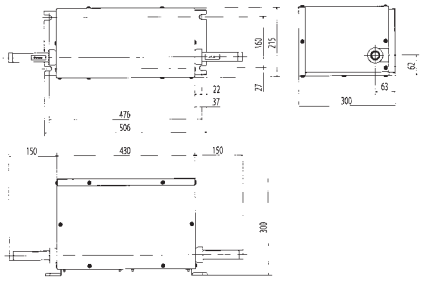

| Mark | Item | |
|---|---|---|
| A | Service valve connection of the attached connecting pipe (gas side) | ø19.05 (3/4") (Flare) |
| B | Service valve connection (liquid side) | ø12.7 (1/2) (Flare) |
| C | Pipe/cable draw-out hole | 4places |
| D | Drain discharge hole | ø20 x 4places |
| E | Anchor bolt hole | M10 x 4places |
| $F_1$ | Cable draw-out hole | ø30 |
| $F_2$ | Cable draw-out hole | ø45 |
| $F_3$ | Cable draw-out hole | ø22 |
| $F_4$ | Cable draw-out hole | ø34 |
| G | Connecting position of the local pipe. (gas side) | ø25.4 (1")(Brazing) |

Notes:
(1) It must not be surrounded by walls on the four sides.
(2) The unit must be fixed with anchor bolts. An anchor bolt must not protrude more the 15mm.
(3) Where the unit is subject to strong winds, lay it in such a direction that the blower outlet faces perpendicularly to the dominant wind direction.
(4) Leave 1m or more space above the unit.
(5) A wall in front of the blower outlet must not exceed the units height.
(6) The model name label is attached on the lower right corner of the front.
(7) Connect the Service valve with local pipe by using the pipe of the attachment.(Gas side only)
(8) Mark ※ shows the connecting position of the local pipe.(Gas side only)

# Mitsubishi Heavy Industries KXZ /further information

Mitsubishi Heavy Industries operates a continuous CSR (Corporate Social Responsibility) policy, with a role to realise a sustainable society through it's various areas of business.

## Creed

- We strongly believe that the customer comes first and that we are obliged to be an innovative partner to society.
- We base our activities on honesty, harmony, and a clear distinction between public and private life.
- We shall strive for innovative management and technological development from an international perspective.

## Reason for Instituting the Creed

In Japan there are many enterprises with their own "creeds" which simply represent their management concept.

Mitsubishi Heavy Industries, Ltd. has a creed of this type, also. It was instituted in 1970 on the basis of the policy advocated by Koyata Iwasaki, president of Mitsubishi Goshi Kaisha in the 1920's, to indicate the essential attitude of the company, the mental attitude of the employees, and the future directions of the company.

The reason for instituting the present creed is so that all of us can call to mind our one hundred years of tradition, and strive for further development in the future.

*Issued 1 June 1970*

MHI's creed was established based on "The Three Corporate Principles" shared by the Mitsubishi Group from the company's beginnings. In the spirit of this creed, MHI continues its efforts to fulfil its three corporate social responsibilities (CSRs): "corporate governance and compliance," "the environment, human rights and labour," and "contribution to society through business activities."

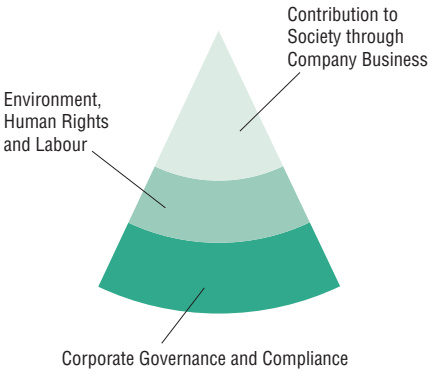


## Contribution to Society through Company Business

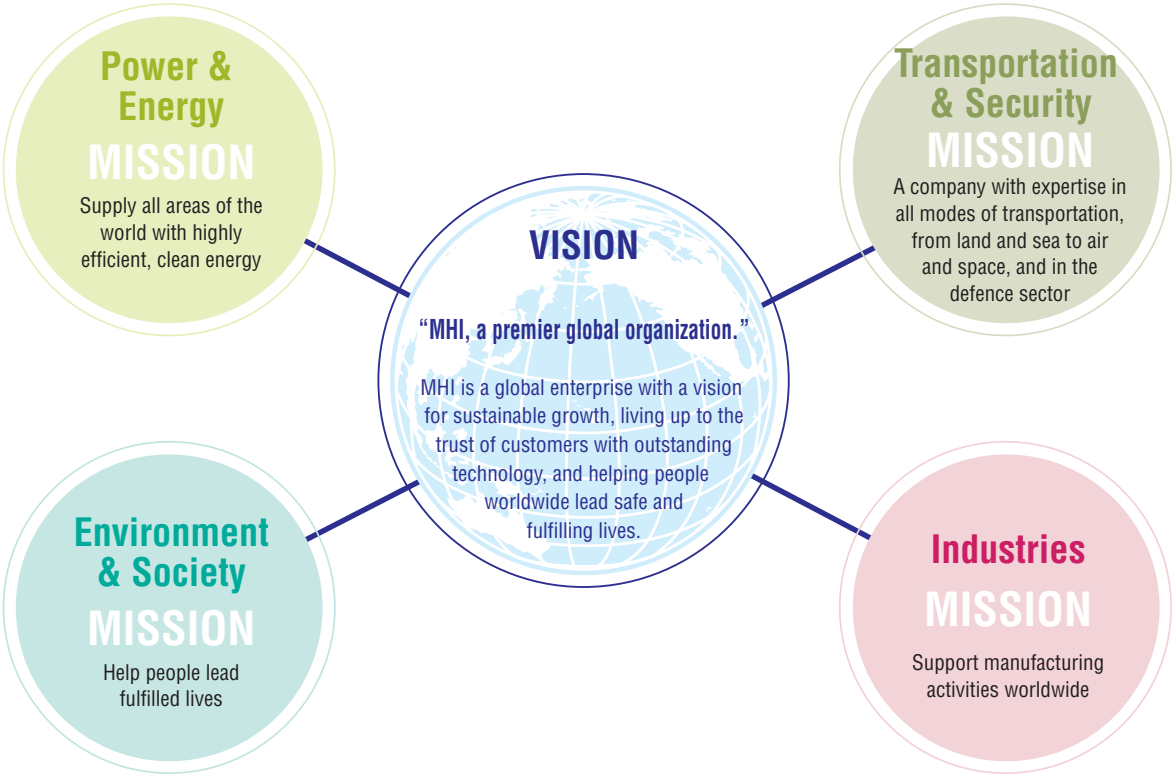

The KXZ product range has been developed in compliance with the Mitsubishi Heavy Industries Policy on the Environment.

**In order to make the sustainable development of society possible, a basic policy on environmental matters has been established.**

Pursuant to the express provision of Section 1 of its creed that "We strongly believe that customers come first and that we are obligated to be an innovative partner to society," MHI shall, as a matter of primary importance, strive, through its R&D, manufacturing and other business activities, to play a useful role in the development of society. To this end, while remaining aware that a business enterprise is a member of society, MHI shall endeavour, in all aspects of its business activities, to reduce the burden on the environment and shall concentrate and fully utilise its technological capabilities for the development of technologies and products that will protect the environment, thus contributing to the establishment of a society in which sustainable development is possible.

**In order to realise its basic policy, MHI has set the following seven conduct guidelines.**

1. Recognise that environmental protection is top priority in the company's operations, and encourage the entire company in its endeavours to protect and improve the environment.
2. Define roles and responsibilities regarding environmental protection by developing and maintaining a corporate organization designated for environmental protection, and create and implement corporate policies and procedures on environmental matters.
3. Endeavour to reduce the burden on the environment by preventing pollution, saving resources, saving energy, reducing waste, reusing materials, and recycling in all aspects of the company's business activities in R&D, designing, procurement of materials, manufacturing, transportation, use, service and disposal.
4. Endeavour to develop and provide advanced, highly reliable, unique technologies and products that contribute to solving environmental and energy problems.
5. Comply with national and local environmental laws and regulations, beyond mere compliance by enacting, implementing and evaluating voluntary standards where necessary, and to endeavour to continuously improve and promote environmental protection activities by establishing environmental goals and targets.
6. Endeavour to protect the environments of foreign countries by carefully examining the consequences of the company's overseas business operations and the exportation of its products, and to become actively involved in technological co-operation overseas in areas of environmental protection.
7. Provide environmental training and other programs to enhance the environmental awareness of all company employees, and take steps to expand public relations activities, such as providing environment-related information to the public and social contribution activities.

**Number of offices/plants by region (Consolidated)** as of May, 2014

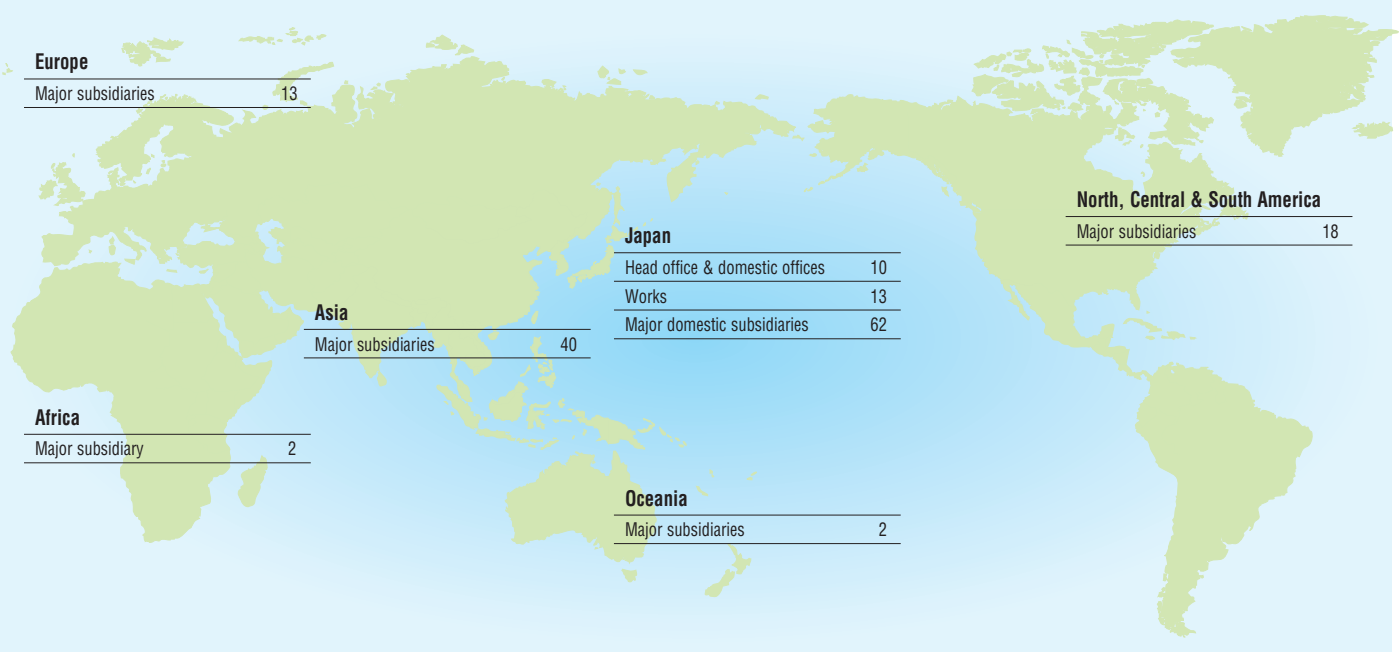

On the land and sea, in the sky and even in space, MHI's stage of operations is expanding limitlessly. We manufacture more than 700 different products which support various industrial and civil activities in both domestic and international markets.

Ships, steel structures, power systems, machinery for both industrial and general use, air-conditioners, pollution reduction and environmental control systems, aerospace systems – the MHI product lines which create rich and comfortable living environments, are as harmonious as an orchestra.

What creates this harmony is MHI's general technological expertise developed over more than a century of hard work. We are highly esteemed in the world for providing high quality products through untiring technological research and development. From new energy development and environmental concerns to the exploration of space, with the advent of the 21st century MHI is confronting a variety of issues to ensure the realisation of a society in which there is harmony between mankind and technology.

## RESOURCES/ENERGY

- Crude Oil Storage Barges
- LNG Tanks
- Boilers & Turbines
- Oil Production Plants
- Contra-Rotating Propellers
- Thermal Power Plants
- Combined Cycle Plants
- Fuel Cells
- Water Turbines
- Wind Turbines
- Geothermal Power Plants
- PWR Nuclear Power Plants
- Uranium Enrichment Equipment
- FBRs
- Co-Generation Systems

## ENVIRONMENT

- Ultra-High Steel Stacks
- Refuse Incineration Plants
- Night Soil Treatment Plants
- Electrostatic Precipitators
- Flue Gas Desulfurization System
- Fluidized Incinerators
- CFC Collecting Equipment

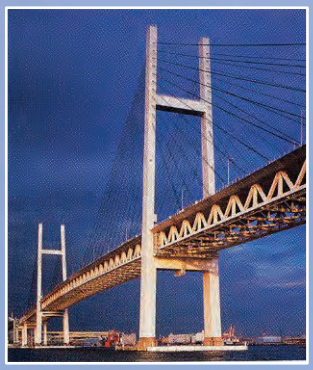

## LOCAL DEVELOPMENT

- Spillway Radial Gates
- Steel Bridges
- Penstocks
- Desalination Plants
- Physical Distribution Equipment
- Engines

## TRANSPORTATION

- Unloader & Container Cranes
- Mechanical Parking Facilities
- Integrated Automated Storage Systems
- Rubber & Tyre Machinery
- Skyrails
- Monorail Cars
- New Transportation Systems
- Passenger Boarding Bridges
- Toll Collection Machine Systems
- Forklift Trucks
- Helicopters
- Aircraft
- Railway Maintenance Equipment
- LNG Carrier
- Container Ships

(C)Mitsubishi Aircraft Corporation

MITSUBISHI HEAVY INDUSTRIES, LTD.

Our Technologies, Your Tomorrow

## INDUSTRIAL

- Chemical Plants
- Wind Tunnel/Experiment Equipment
- Casting Machines
- Strip Mill
- Cement Plant
- Stepless Variable Speed Gears
- Industrial Robots
- Injection Moulding Machines
- Pulp & Paper Machinery
- Corrugation Machines
- Box Making Machines
- Machine Tools

## LEISURE/LIFESTYLE

- Ceiling Recess Packaged Air Conditioners
- Automotive Air Conditioners
- Residential Use Split Air Conditioners
- Refrigeration Units
- Dry Cleaning Machines
- Food Machinery
- Cruise Ships
- Multi-purpose Dome
- Stage Machinery Systems

## INFORMATION SYSTEM

- Cable Layer
- Printing Machinery

## DEVELOPMENT

- Oceanographic Research Ships
- Deep Submergence Research Vehicles
- Communications Satellite Rockets
- Space Transportation
- Rockets & Engines

## DEFENCE

- Submarines
- Naval Vessels
- Jet Fighters
- Helicopters
- Missiles
- Tanks & Infantry Fighting Vehicles

# Before starting use

### Heating performance
The heating performance values (kW) described in catalogue are the values obtained by operating at an outdoor temperature of 7℃ and indoor temperature of 20℃ as set forth in the ISO Standards. As the heating performance decreases as the outdoor temperature drops, if the outdoor temperature is too low and the heating performance is insufficient, use other heating appliances as well.

### Indication of sound values
The sound values are the values (A scale) measured in a chamber such as an anechoic chamber following the ISO Standards. In the actual installation state, the value is normally larger than the values given in the catalogue due to the effect of surrounding noise and echo. Take this into consideration when installing.

### Use in oil atmosphere
Avoid installing this unit in as atmosphere where oil scatters or builds up, such as in a kitchen or machine factory.
If the oil adheres to the heat exchanger, the heat exchanging performance will drop, mist may be generated, and the synthetic resin parts may deform and break.

### Use in acidic or alkaline atmosphere
If this unit is used in acidic atmosphere such as hot spring areas having high level of sulfuric gases or in alkaline atmosphere including ammonia or calcium chloride, places where the exhaust of the heat exchanger is sucked in, or at coastal areas where the unit is subject to salt breezes, the outer plate or heat exchanger, etc., will corrode. Please ask a dealer or specialist when you use an air conditioner in places differing from a general atmosphere.

### Use in places with high ceilings
If the ceiling is high, install a circulator to improve the heat and air flow distribution when heating.

### Refrigerant leakage
The refrigerant (R410A) used for Air conditioner is non-toxic and inflammable in its original state.
However, in consideration of a state where the refrigerant leaks into the room, measures against refrigerant leaks must be taken in small rooms where the tolerable level could be exceeded. Take measures by installing ventilation devices, etc.

### Use in snowy areas
Take the following measures when installing the outdoor unit in snowy areas.

**·Snow prevention**
Install a snow-prevention hood so that the snow does not obstruct the air intake port or enter and freeze in the outdoor unit.

**·Snow piling**
In areas with heavy snow fall, the piled snow could block the air intake port. In this case, a frame that is 50cm or higher than the estimated snow fall must be installed underneath the outdoor unit.

### Automatic defrosting device
If the temperature is low, and the humidity is high, frost will stick to the heat exchanger of the outdoor unit. If use is continued, the heating performance will drop.
The "Automatic defrosting device" will function to remove this frost.
After heating for approx, three to ten minutes, it will stop, and the frost will be removed. After defrosting, hot air will be blown again.

### Servicing the air-conditioner
After the air-conditioner is used for several seasons, dirt will build up in the air-conditioner causing the performance to drop. In addition to regular servicing, we recommend the maintenance contract (charged for) by a specialist.

# ⚠ Safety Precautions

### Air-conditioner usage target
The air-conditioner described in this catalogue is a dedicated cooling/heating device for human use.
Do not use it for special applications such as the storage of foodstuffs, animals or plants, precision devices or valuable art, etc.
This could cause the quality of the items to drop, etc.
Do not use this for cooling vehicles or ships. Water leakage or current leaks could occur.

### Before use
Always read the "User's Manual" thoroughly before starting use.

### Installation
Always commission the installation to a dealer or specialist. Improper installation will lead to water leakage, electric shocks and fires.
Make sure that the outdoor unit is stable in installation. Fix the unit to stable base.

### Usage place
Do not install in places where combustible gas could leak or where there are sparks.
Installation in a place where combustible gas could be generated, flow or accumulate, or places containing carbon fibers could lead to fires.


MITSUBISHI HEAVY INDUSTRIES, LTD.

Mitsubishi Heavy Industries, Ltd.
Air-Conditioning & Refrigeration Division
Machinery Equipment & Infrastructure
16-5, Konan 2-chome, Minato-ku, Tokyo, 108-8215 Japan
**http://www.mhi.co.jp**


**Our factories are ISO9001 and ISO14001 certified.**

**Certified ISO 9001**

BIWAJIMA PLANT
Mitsubishi Heavy Industries, Ltd.
Air-conditioning & Refrigeration Systems Headquarters
Certified ISO 9001
Certificate Number : JQA-0709

MITSUBISHI HEAVY INDUSTRIES-MAHAJAK AIR CONDITIONERS CO., LTD.
Certified ISO 9001
Certificate Number : 04100 1998 0813

Mitsubishi Heavy Industries-Haier (Quingdao) Air-conditioners Co.,Ltd.
Certificate Number : 5170-1996-AQ-RCG-RvA

**Certified ISO 14001**

BIWAJIMA PLANT
Mitsubishi Heavy Industries, Ltd.
Air-conditioning & Refrigeration Systems Headquarters
Certificate Number : YKA4003622

MITSUBISHI HEAVY INDUSTRIES-MAHAJAK AIR CONDITIONERS CO.,LTD.
Certificate Number : 04104 1998 0813 E5

Mitsubishi Heavy Industries-Haier (Quingdao) Air-conditioners Co.,Ltd.
Certificate number : 01-1998-083


16KX02E December 2015 R



Because of our policy of continuous improvement, we reserve the right to make changes in all specifications without notice.



Edited in Japan